GAME CONSOLE ASSEMBLY

1. With the cardboard grid cover face down, attach the plastic grid by first sliding in the longer top tabs ***(See Fig. 1A)*** and then the shorter bottom tabs slide forward to lock tabs into grid. ***(See Fig. 1B)***

Fig. 1A

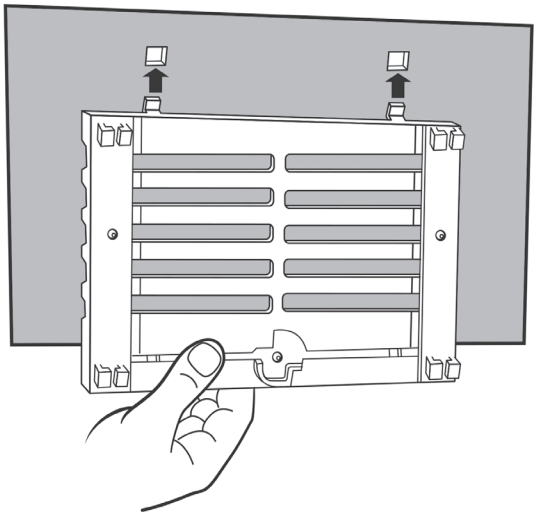

Fig. 1B

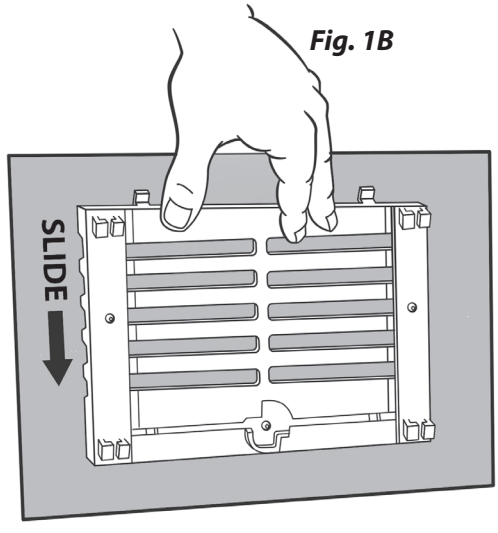

2. Slide feet into position until they snap into place. This locks the game board together. ***(See Fig. 2)***

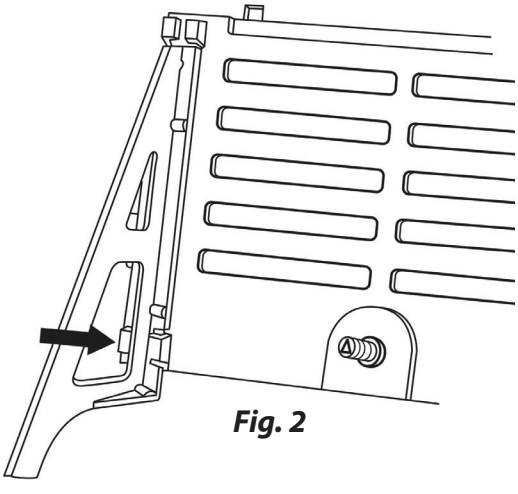

Fig. 2

3. MC takes game sheet #1 and without permitting the other players to see it, folds it in half and places it in the grid with questions 1 and 2 facing him/her ***(as shown in Fig. 3)***.

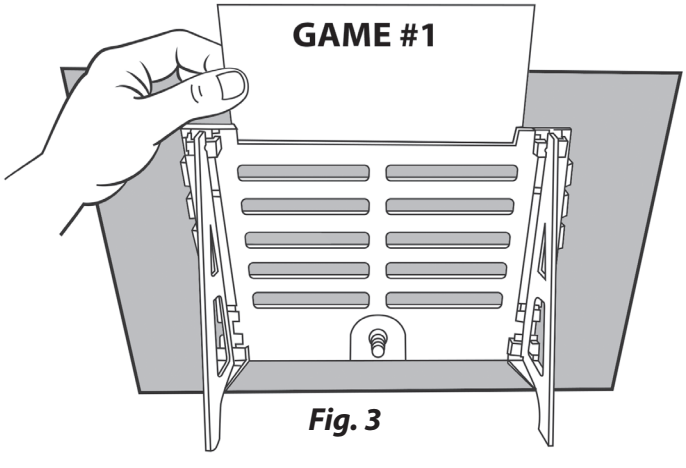

Fig. 3

4. Move cam lever to position #1 to line up the answers of question #1 in the windows. ***(Be sure the game sheet is pushed down as far as it will go).***

5. To shift the second set of answers into the windows, move the cam lever to position #2.

INSTRUCTIONS

OBJECT: To have the most points at the end of 3 rounds by matching the most popular survey answers.

CONTENTS: 1 CLASSIC Family Feud Game Console with grid cover;
Scoreboard with sections for Face-Off and Fast Money Rounds, Totals, and Strike Indicator;
1 Wipe Off Marker; 1 Survey Question/Instruction Pad

SET UP: Follow instructions on previous page to set up the Game Console.

Select someone to serve as host/MC and divide remaining players into 2 teams.

Insert sheet as instructed on previous page.

Place console where all players can see the front with the MC seated behind it to read questions and reveal answers.

PLAYING FOR 3 OR MORE PLAYERS: Throughout the game, players will try to match their answers with the most popular survey answers. Each game consists of four parts:
Three Face-Off Rounds and the Fast Money Bonus Round.

For a 3 player game, one player acts as MC with remaining two playing against one another.

THE FACE-OFF ROUNDS

Each Round begins with a one-on-one Face-Off as a player from each team tries to take control of the question by giving the most popular answer.

Each team chooses a player for the Face-Off.

The MC announces the number of answers on the board for the question and pulls the slides on the answer board next to the rows of X's. The slides which contain the answers remain closed. The MC then reads the question aloud.

Each player competes to answer the question first by raising his/her hand.
The MC chooses the player who raised his/her hand first, and that player must then answer the question immediately. If the answer given is the number one answer for the survey question, the MC pulls the corresponding slide to reveal this as the number one answer and that player may choose to pass or play.

FACE-OFF ROUND 2 – DOUBLE POINTS

PREPARATION: To prepare for the next question, the MC closes all open slides to cover the entire answer board. He/she then turns the cam lever to position 2 to reveal the second question and answers on the MC SIDE of the board.

Question #2: A new member from each team is chosen for the Face-Off and as in Question #1, The MC announces the number of answers on the board for the question and pulls the slides on the answer board next to the rows of X's. The slides which contain the answers remain closed. The MC then reads the question aloud.

The game is played the same as in Question #1, but the final point total is doubled when written on the scorecard section for that round.

FACE-OFF ROUND 3 – DOUBLE POINTS

PREPARATION: To prepare for Question #3, the MC returns the cam lever to position 1 and closes all the slides. The MC removes the game sheet and, without letting the players see it, folds the sheet inside-out and replaces it in the grid so the MC SIDE for Question #3 faces him/her.

Question #3: A new member from each team is chosen for the Face-Off and the MC repeats the opening procedure from Questions #1 and #2. The game is played the same as in Questions #1 and #2. As on Question #2, the final point total is doubled when written on the scorecard section for that round.

THE FAST MONEY BONUS ROUND

WHO PLAYS: The team who earned the most points after Questions 1, 2, and 3 selects two members to earn bonus points in the Fast Money Round.

NOTE: *When playing with only 3 players, the same player may answer two answers for each Fast Money question.*

PREPARATION: The MC closes the 10 slides and turns the cam to Position 2. The Fast Money section of the Wipe-Off Scoreboard will be used to record the answers.

The player who will be answering the Fast Money questions second should leave the room to avoid hearing the answers of the first player.

ROUND ONE: When everyone is ready, the MC may begin asking the 5 Fast Money round questions to the first player.

After each question is answered the MC writes the answer on the Fast Money section of the wipe-off scoreboard in the space designated for each player/question. *(Alternatively any non-Fast Money playing player may record the answers)*.

After the first player has answered all 5 Fast Money questions, the MC may reveal the fast money answers on the board along with their point values. All correct answers score the points assigned for that answer. The MC totals all points and places that value in the **FAST MONEY ROUND 1** space on the scoreboard.

ROUND TWO: To begin Round Two of Fast Money, the previous answers may be wiped off the answer board, or left on if preferred provided the second Fast Money player can NOT see them.

The slides are all closed and the second Fast Money player may enter the room to answer the same 5 questions.

Questions are read, answered, and recorded in the same manner as Round One.

Should a repeat answer be given, the MC will say "Try again" and the player must give another answer.

When all five Fast Money questions have been played, the MC again reveals all of the answers on the board, announcing and adding the point value after each. The score for Round Two is written on the scoreboard, and both Fast Money scores are added together and placed in the TOTAL FAST MONEY SCORE section.

If the Total Points is equal or greater than 200, the team wins 1000 BONUS points.

The team with the most total points after 3 complete games is the winner of the **FAMILY FEUD!**

FREMANTLEMEDIA

Family Feud®/©: 2016.
Licensed by FremantleMedia N.A., Inc. All Rights Reserved.

Distributed by Endless Games, Inc.
Freehold, New Jersey 07728 • 732-414-2213
The Endless Games Logo is a Registered Trademark of Endless Games, Inc.
MADE IN CHINA

Visit Our Website at: www.endlessgames.com

QUES #3 NAME SOMETHING SPECIFIC YOU TURN OVER.

FAST MONEY QUESTIONS MC SIDE

FM 1 WHAT BREED OF DOG DO YOU THINK EATS THE MOST?
FM 2 NAME SOMETHING POPEYE MIGHT HAVE TATTOOED ON HIS ARM.
FM 3 NAME AN ANIMAL THAT CARRIES ITS BABIES.
FM 4 NAME A WAY TO SAVE MONEY WHEN VACATIONING.
FM 5 NAME SOMETHING THAT IS PADDED.

Eggs 8

SAINT BERNARD 22 | GERMAN SHEPHERD 17 | PIT BULL 17

Money 3

ANCHOR 54 | OLIVE OYL 28 | CAN OF SPINACH 9

X X X X X

KANGAROO 76 | POSSUM 10 | CAT 5

X X X X X

BRING/COOK FOOD 46 | CAMP/TENT 12 | PACKAGE DEALS 7

X X X X X

BRA 38 | CHAIR 21 | PILLOW 9

Pancake 45

ROTTWEILER 14 | GREAT DANE 6 | HUSKY 5

Mattress 22

MOM 3 | HEART 2

Page/Paper 9

APE/MONKEY 3 | DOG 2

X X X X X

DRIVE 5 | NO SHOPPING 4 | COUPON 4

X X X X X

ATHLETIC EQUIPMENT 6 | COUCH/CUSHION 5

▼ FOLD LINE ▼

GAME 1

BRA 38 | CHAIR 21 | PILLOW 9

X X X X X

BRING/COOK FOOD 46 | CAMP/TENT 12 | PACKAGE DEALS 7

X X X X X

DRIVE 5 | NO SHOPPING 4 | COUPON 4

X X X X X

KANGAROO 76 | POSSUM 10 | CAT 5

Page/Paper 9

ANCHOR 54 | OLIVE OYL 28 | CAN OF SPINACH 9

Mattress 22

SAINT BERNARD 22 | GERMAN SHEPHERD 17 | PIT BULL 17

Pancake 45

MOM 3 | HEART 2

Money 3

ROTTWEILER 14 | GREAT DANE 6 | HUSKY 5

Eggs 8

APE/MONKEY 3 | DOG 2

X X X X X

ATHLETIC EQUIPMENT 6 | COUCH/CUSHION 5

QUES #1 NAME SOMETHING FAMILIES USE ONLY WHEN SPECIAL GUESTS VISIT.

MC SIDE

QUES #2 NAME AN EXCUSE TEENAGE GIRLS USE WHEN THEY COME HOME LATE AT NIGHT.

China/Crystal	59
Car Trouble	58
Silverware	23
No Transportation	10
Guest Room	9
Fell Asleep	4
Table Linens	3
Forgot Time	3

▼ *FOLD LINE* ▼

Forgot Time	3
Table Linens	3
Fell Asleep	4
Guest Room	9
NoTransportation	10
Silverware	23
Car Trouble	58
China/Crystal	59

QUES #3 NAME SOMETHING A MAN HAS THAT HE'D BE UPSET IF SOMEONE ELSE USED IT.

FAST MONEY QUESTIONS MC SIDE

FM 1 NAME SOMETHING YOU'D SEE AT A LUAU.
FM 2 NAME SOMETHING YOU'D EXPECT TO SEE IN A PSYCHIATRIST'S OFFICE.
FM 3 NAME AN OCCUPATION WHOSE MEMBERS PROBABLY NEVER GET TRAFFIC TICKETS.
FM 4 NAME SOMETHING PEOPLE MIGHT KNOW ABOUT DUMBO.
FM 5 TELL ME A FAMOUS WOMAN WITH MICHELLE IN HER NAME.

Tools/Mower 9

ROASTING PIG 37 | HULA DANCERS 22 | LEIS 14

Wife/Mate 3

COUCH 57 | BOOKS/MAGAZINES 13 | PSYCHIATRIST 6

X X X X X

POLICE OFFICER 76 | PARAMEDICS 8 | JUDGE 2

X X X X X

BIG EARS 55 | HE CAN FLY 22 | HE'S AN ELEPHANT 17

X X X X X

MICHELLE OBAMA 57 | MICHELLE PFEIFFER 31 | MICHELLE LEE 2

Razor 38

PINEAPPLES 9 | GRASS SKIRTS 8

Car 18

PATIENTS 5 | DIPLOMA 4

Toothbrush 17

FIRE FIGHTER 2 | FUNERAL DRIVER 2

X X X X X

IN A MOVIE 2 | CUTE/LOVABLE 2

X X X X X

MICHELLE PHILLIPS 2 | MICHELLE BACHMANN 2 | SARAH MICHELLE GELLAR 2

▼ *FOLD LINE* ▼

GAME 2

MICHELLE OBAMA 57 | MICHELLE PFEIFFER 31 | MICHELLE LEE 2

X X X X X

BIG EARS 55 | HE CAN FLY 22 | HE'S AN ELEPHANT 17

X X X X X

POLICE OFFICER 76 | PARAMEDICS 8 | JUDGE 2

Toothbrush 17

COUCH 57 | BOOKS/MAGAZINES 13 | PSYCHIATRIST 6

Car 18

PATIENTS 5 | DIPLOMA 4

Wife/Mate 3

PINEAPPLES 9 | GRASS SKIRTS 8

Tools/Mower 9

ROASTING PIG 37 | HULA DANCERS 22 | LEIS 14

Razor 38

FIRE FIGHTER 2 | FUNERAL DRIVER 2

X X X X X

IN A MOVIE 2 | CUTE/LOVABLE 2

X X X X X

MICHELLE PHILLIPS 2 | MICHELLE BACHMANN 2 | SARAH MICHELLE GELLAR 2

QUES #1 NAME AN ANIMAL WHOSE LEGS ARE FEATURED ON A RESTAURANT MENU.

MC SIDE

QUES #2 NAME SOMETHING THAT PARENTS WISH THEIR TEENAGERS WOULD STOP COMPLAINING ABOUT.

Frog	43
Money/Allowance	33
Chicken	32
School/Homework	17
Crab	14
Chores	15
Lamb	4
Curfew/Rules	13
BeingBored	6

▼ *FOLD LINE* ▼

BeingBored	6
Curfew/Rules	13
Lamb	4
Chores	15
Crab	14
School/Homework	17
Chicken	32
Money/Allowance	33
Frog	43

QUES #3 IF YOU GET FIRED ON MONDAY, NAME SOMETHING YOU MIGHT DO ON TUESDAY.

FAST MONEY QUESTIONS MC SIDE

FM 1 NAME SOMETHING THAT TURNS BROWN.
FM 2 NAME A REASON A VAMPIRE WOULD MAKE A BAD ROOMMATE.
FM 3 NAME SOMETHING THAT'S ADVERTISED AS HAVING GOOD "SUPPORT".
FM 4 NAME SOMETHING YOU SHOULD DO IF YOU GET AUDITED.
FM 5 NAME SOMETHING YOU'D HATE TO DISCOVER THE HOSPITAL YOU'RE STAYING AT DOESN'T HAVE.

X X X X X **Find New Job 49**

BANANAS 26 LEAVES 18 LETTUCE 8 APPLES 6 GRASS 5 FLOWERS 5

X X X X X **Sleep 30**

SUCK YOUR BLOOD 45 UP ALL NIGHT 28 SLEEPS ALL DAY12 ALWAYS IN DARK 4

X X X X X **FileUnemployment 6**

BRA 41 PANTYHOSE 16 SHOES 12 GIRDLE 7 MATTRESS 4 COMPUTER 3

X X X X X **Go Shopping 3**

RECEIPT/RECORDS 39 CALL ACCOUNTANT 10 GET A LAWYER 9 COOPERATE/HONESTY 9 WORRY/CRY 8 RUN/LEAVE COUNTRY 7

X X X X X X X X X X X X X X X

DOCTORS 30 MEDICINE 18 BATHROOM 12 FOOD 6 NURSES 5 TV 4

▼ *FOLD LINE* ▼

GAME 3

TV 4 NURSES 5 FOOD 6 BATHROOM 12 MEDICINE 18 DOCTORS 30

X X X X X X X X X X X X X X X

RUN/LEAVE COUNTRY 7 WORRY/CRY 8 COOPERATE/HONESTY 9 GET A LAWYER 9 CALL ACCOUNTANT 10 RECEIPT/RECORDS 39

X X X X X

Go Shopping 3

COMPUTER 3 MATTRESS 4 GIRDLE 7 SHOES 12 PANTYHOSE 16 BRA 41

X X X X X

FileUnemployment 6

ALWAYS IN DARK 4 SLEEPS ALL DAY12 UP ALL NIGHT 28 SUCK YOUR BLOOD 45

X X X X X

Sleep 30

FLOWERS 5 GRASS 5 APPLES 6 LETTUCE 8 LEAVES 18 BANANAS 26

X X X X X

Find New Job 49

QUES #1 NAME A REASON YOU MIGHT SUSPECT THE BEARDED LADY AT THE CIRCUS IS REALLY A MAN. MC SIDE

QUES #2 NAME SOMETHING YOU MIGHT RENT ON A SUNNY DAY.

X	X	X	X	X	Adam's Apple	26
Jet Ski				3	Boat	34
X	X	X	X	X	HairyBody/Beard	23
X	X	X	X	X	Car/Convertible	19
X	X	X	X	X	DeepVoice	20
X	X	X	X	X	Umbrella	14
X	X	X	X	X	Muscles/Build	14
X	X	X	X	X	Bike	13
X	X	X	X	X	NoBreasts	6
X	X	X	X	X	Movie	9

▼ *FOLD LINE* ▼

X	X	X	X	X	Movie	9
X	X	X	X	X	NoBreasts	6
X	X	X	X	X	Bike	13
X	X	X	X	X	Muscles/Build	14
X	X	X	X	X	Umbrella	14
X	X	X	X	X	DeepVoice	20
X	X	X	X	X	Car/Convertible	19
X	X	X	X	X	HairyBody/Beard	23
Jet Ski				3	Boat	34
X	X	X	X	X	Adam's Apple	26

QUES #3 NAME SOMETHING YOU FEEL BEFORE YOU BUY IT.

FAST MONEY QUESTIONS **MC SIDE**

FM 1 NAME SOMETHING ELVIS PRESLEY WILL ALWAYS BE REMEMBERED FOR.
FM 2 TELL ME SOMETHING A LOT OF PEOPLE HAVE BUT CAN'T AFFORD.
FM 3 NAME A VERY RICH WOMAN.
FM 4 NAME A FAMOUS JESSICA A LOT OF MEN WOULD LIKE TO MARRY.
FM 5 WE ASKED 100 WOMEN...NAME A SUPERHERO WHO WAS HOT!

X	X	X	X	X	**Food**		**79**
HIS MUSIC/SONGS 53	SWIVEL HIPS/MOVES 30	HIS CLOTHES 5	HAIR/SIDEBURNS 4	HIS DEATH 3	DRUG USE 2		
X	X	X	X	X	**Clothes**		**11**
FANCY CAR 47	HOUSE 19	CREDIT CARDS 7	CELL PHONE 6	TV/CABLE 5	BILLS 2		
X	X	X	X	X	**Blanket**		**2**
OPRAH WINFREY 49	ELIZABETH TAYLOR 7	IVANA TRUMP 7	HILLARY CLINTON 6	MADONNA 3	ANGELINA JOLIE 3		
X	X	X	X	X	**Pet**		**2**
JESSICA SIMPSON 56	JESSICA ALBA 18	JESSICA BIEL 14	JESSICA RABBIT 5	JESSICA LANGE 3	SARAH JESSICA PARKER 2		
X	X	X	X	X	**Pillow**		**2**
SUPERMAN 42	BATMAN 28	SPIDER-MAN 16	CATWOMAN 2	WOLVERINE 2	THE BIONIC WOMAN 2		

▼ *FOLD LINE* ▼

GAME 4

X	X	X	X	X	**Food**		**79**
HIS MUSIC/SONGS 53	SWIVEL HIPS/MOVES 30	HIS CLOTHES 5	HAIR/SIDEBURNS 4	HIS DEATH 3	DRUG USE 2		
X	X	X	X	X	**Clothes**		**11**
FANCY CAR 47	HOUSE 19	CREDIT CARDS 7	CELL PHONE 6	TV/CABLE 5	BILLS 2		
X	X	X	X	X	**Blanket**		**2**
OPRAH WINFREY 49	ELIZABETH TAYLOR 7	IVANA TRUMP 7	HILLARY CLINTON 6	MADONNA 3	ANGELINA JOLIE 3		
X	X	X	X	X	**Pet**		**2**
JESSICA SIMPSON 56	JESSICA ALBA 18	JESSICA BIEL 14	JESSICA RABBIT 5	JESSICA LANGE 3	SARAH JESSICA PARKER 2		
X	X	X	X	X	**Pillow**		**2**
SUPERMAN 42	BATMAN 28	SPIDER-MAN 16	CATWOMAN 2	WOLVERINE 2	THE BIONIC WOMAN 2		

QUES #1 NAME SOMETHING PEOPLE USE TO MAKE A WISH.

MC SIDE

QUES #2 NAME A WAY PEOPLE PASS THE TIME WHEN THEY'RE STUCK IN TRAFFIC.

Wish Bone	42
Listen To Radio	68
Coin In Well	21
Sing	10
Star	17
Read	14
Candles	6
Talk On The Phone	7
Flower	6

▼ *FOLD LINE* ▼

Wish Bone	42
Listen To Radio	68
Coin In Well	21
Sing	10
Star	17
Read	14
Candles	6
Talk On The Phone	7
Flower	6

QUES #3 NAME A WEALTHY FAMILY IN AMERICAN HISTORY.

FAST MONEY QUESTIONS **MC SIDE**

FM 1 IN YOUR OPINION, WHO'S THE BEST PRESIDENT THAT AMERICA EVER HAD?
FM 2 REAL OR FICTIONAL, NAME A FAMOUS HORSE.
FM 3 NAME SOMETHING YOU'D SEE A LOT ON A TROPICAL ISLAND.
FM 4 TELL ME SOMETHING YOU HATE ABOUT GOING TO THE MOVIES.
FM 5 NAME A BODY PART WHERE WOMEN STRATEGICALLY APPLY A S PLASH OF PERFUME.

X X X X X **The Rockefellers 46**

RONALD REAGAN 27 ABRAHAM LINCOLN 17 BILL CLINTON 13 JOHN F. KENNEDY 12 GEORGE WASHINGTON 9 FRANKLIN ROOSEVELT 6

X X X X X **The Kennedys 32**

MR. ED 29 TRIGGER 14 SEABISCUIT 12 SECRETARIAT 10 FLICKA 8 SILVER 7

X X X X X **The Vanderbilts 5**

TREES 58 SAND/BEACHES 13 FRUIT 12 FLOWERS 7 WATER/OCEAN 6

X X X X X **The Hearsts 4**

PRICE 50 LONG LINES/CROWDS 12 PEOPLE TALKING 10 ADVERTISEMENTS 7 MOVIE TOO LOUD 6

X X X X X X X X X X

NECK 50 BEHIND THE EARS 19 WRISTS 15 CHEST 13 INNER ELBOW 2

▼ *FOLD LINE* ▼

GAME 5

NECK 50 BEHIND THE EARS 19 WRISTS 15 CHEST 13 INNER ELBOW 2

X X X X X X X X X X

PRICE 50 LONG LINES/CROWDS 12 PEOPLE TALKING 10 ADVERTISEMENTS 7 MOVIE TOO LOUD 6

X X X X X **The Hearsts 4**

TREES 58 SAND/BEACHES 13 FRUIT 12 FLOWERS 7 WATER/OCEAN 6

X X X X X **The Vanderbilts 5**

MR. ED 29 TRIGGER 14 SEABISCUIT 12 SECRETARIAT 10 FLICKA 8 SILVER 7

X X X X X **The Kennedys 32**

RONALD REAGAN 27 ABRAHAM LINCOLN 17 BILL CLINTON 13 JOHN F. KENNEDY 12 GEORGE WASHINGTON 9 FRANKLIN ROOSEVELT 6

X X X X X **The Rockefellers 46**

QUES #1 NAME A SPECIFIC OCCUPATION IN WHICH YOU MIGHT HAVE TO HURT SOMEONE.

MC SIDE

QUES #2 IF YOU COULD BE ON A "TEN BEST" LIST, WHAT LIST WOULD YOU BE ON?

X	X	X	X	X	**Boxer**	**37**
The Kindest					**The Richest**	**29**
X	X	X	X	X	**Police Officer**	**28**
X	X	X	X	X	**Best Dressed**	**14**
X	X	X	X	X	**Wrestler**	**12**
X	X	X	X	X	**Best Looking**	**9**
X	X	X	X	X	**Doctor/Dentist**	**8**
X	X	X	X	X	**Best Parent**	**7**
X	X	X	X	X	**Bouncer**	**6**
X	X	X	X	X	**The Sexiest**	**5**

▼ *FOLD LINE* ▼

X	X	X	X	X	**5**	**The Sexiest**
X	X	X	X	X	**6**	**Bouncer**
X	X	X	X	X	**7**	**Best Parent**
X	X	X	X	X	**8**	**Doctor/Dentist**
X	X	X	X	X	**9**	**Best Looking**
X	X	X	X	X	**12**	**Wrestler**
X	X	X	X	X	**14**	**Best Dressed**
X	X	X	X	X	**28**	**Police Officer**
4			**The Kindest**		**29**	**The Richest**
X	X	X	X	X	**37**	**Boxer**

QUES #3 NAME SOMETHING THAT CAN BE LUMPY.

FAST MONEY QUESTIONS MC SIDE

FM 1 NAME SOMETHING PEOPLE RENT FOR ONE DAY.
FM 2 NAME SOMETHING PEOPLE HAVE THE "BEST ONE" OF.
FM 3 NAME SOMETHING A PERSON OPENS EVERY DAY.
FM 4 NAME SOMETHING IN YOUR HOUSE YOU MIGHT START YELLING AT IF IT STOPPED WORKING.
FM 5 NAME A HOUSEHOLD CHORE THAT IS LITERALLY A FOUR LETTER WORD.

Pillow 6

CAR/LIMO 43 MOVIE/VIDEO 36 MOTEL/HOTEL 12

X X X X X

OUTFIT/SHOES 25 FRIEND 22 CHILD 12

X X X X X

MAIL/MAIL BOX 36 DOOR 23 MOUTH 16

X X X X X

TELEVISION 49 REFRIGERATOR 9 STOVE/OVEN 10

X X X X X

DUST 41 WASH 36 COOK 15

Mashed Potatoes 29

CARPET CLEANER 4 U-HAUL/TRAILER 3

Oatmeal/Cereal 24

CAR 9 PET 7

Mattress/Bed 13

REFRIGERATOR 9 EYES 6

Grits 7

COMPUTER 5 SPOUSE 4

Soup 7

IRON 7

▼ *FOLD LINE* ▼

GAME 6

IRON 7

X X X X X

Soup 7

COMPUTER 5 SPOUSE 4

X X X X X

Grits 7

REFRIGERATOR 9 EYES 6

X X X X X

Mattress/Bed 13

CAR 9 PET 7

X X X X X

Oatmeal/Cereal 24

CARPET CLEANER 4 U-HAUL/TRAILER 3

X X X X X

Mashed Potatoes 29

X X X X X

DUST 41 WASH 36 COOK 15

TELEVISION 49 REFRIGERATOR 9 STOVE/OVEN 10

MAIL/MAIL BOX 36 DOOR 23 MOUTH 16

OUTFIT/SHOES 25 FRIEND 22 CHILD 12

CAR/LIMO 43 MOVIE/VIDEO 36 MOTEL/HOTEL 12

QUES #1 NAME A GOOD REASON FOR A MAN TO GIVE HIS WIFE FLOWERS.

MC SIDE

QUES #2 NAME A SERVICE SOMEONE PERFORMS ON YOU WHILE YOU'RE SITTING DOWN.

Love/No Reason	37
Haircut	29
Anniversary	28
Manicure/Pedicure	14
Birthday	12
Dental Work	9
To Make Up	8
Massage	7
Shine Shoes	5

▼ *FOLD LINE* ▼

Shine Shoes	5
Massage	7
To Make Up	8
Dental Work	9
Birthday	12
Manicure/Pedicure	14
Anniversary	28
Haircut	29
Love/No Reason	37

QUES #3 NAME SOMETHING THAT IS ASSOCIATED WITH A SOUTHERN BELLE.

FAST MONEY QUESTIONS **MC SIDE**

FM 1 NAME SOMETHING BESIDES YOURSELF THAT YOU WASH.
FM 2 NAME A FAMOUS "LARRY".
FM 3 NAME SOMETHING PEOPLE DO WITH THEIR THUMBS.
FM 4 NAME A WORD THAT STARTS WITH BED.
FM 5 NAME SOMEONE WHOSE PHONE CALLS YOU SCREEN.

Plantations 6

CLOTHES/LAUNDRY 50 | CAR 19 | DISHES 17

X X X X X

LARRY KING 26 | LARRY THE CABLE GUY 20 | LARRY HAGMAN 17

X X X X X

HITCHHIKE 29 | SUCK THEM 25 | TWIDDLE THEM 11

X X X X X

BEDROOM 64 | BEDTIME 8 | BED HEAD 6

X X X X X

TELEMARKETERS 32 | BILL COLLECTORS 22 | NO ONE 6

Class/Manners 23

KIDS 7 | PETS 6

Big Dress 18

LARRY FINE/3 STOOGES 15 | LARRY FLYNT 9 | LARRY BIRD 6

Accent/Speech 14

PUSH BUTTONS 7 | GIVE "THUMBS UP" 5

Church 10

BEDAZZLE 3 | BEDROCK 3

Money 9

EVERYONE 5 | IN-LAWS 5

▼ *FOLD LINE* ▼

GAME 7

Class/Manners 23

CLOTHES/LAUNDRY 50 | CAR 19 | DISHES 17

KIDS 7 | PETS 6

Big Dress 18

X X X X X

LARRY KING 26 | LARRY THE CABLE GUY 20 | LARRY HAGMAN 17

LARRY FINE/3 STOOGES 15 | LARRY FLYNT 9 | LARRY BIRD 6

Accent/Speech 14

X X X X X

HITCHHIKE 29 | SUCK THEM 25 | TWIDDLE THEM 11

PUSH BUTTONS 7 | GIVE "THUMBS UP" 5

Church 10

X X X X X

BEDROOM 64 | BEDTIME 8 | BED HEAD 6

BEDAZZLE 3 | BEDROCK 3

Money 9

X X X X X

TELEMARKETERS 32 | BILL COLLECTORS 22 | NO ONE 6

EVERYONE 5 | IN-LAWS 5

Plantations 6

QUES #1 NAME SOMETHING PEOPLE SAY THEY HAVE TO CATCH UP ON.

MC SIDE

QUES #2 NAME SOMETHING YOU MIGHT HAVE MORE OF AS YOU GET OLDER.

X	X	X	X	X	**Sleep**	**52**
Aches And Pains				**3**	**Gray Hair**	**37**
X	X	X	X	X	**Bills**	**28**
Fun				**2**	**Wrinkles**	**20**
X	X	X	X	X	**Housework**	**11**
X	X	X	X	X	**Money**	**19**
X	X	X	X	X	**Reading**	**10**
X	X	X	X	X	**Wisdom/Patience**	**9**
X	X	X	X	X	**Homework**	**8**
X	X	X	X	X	**Weight**	**5**

▼ *FOLD LINE* ▼

X	X	X	X	X	**Weight**	**5**
X	X	X	X	X	**Homework**	**8**
X	X	X	X	X	**Wisdom/Patience**	**9**
X	X	X	X	X	**Reading**	**10**
X	X	X	X	X	**Money**	**19**
X	X	X	X	X	**Housework**	**11**
2				**Fun**	**Wrinkles**	**20**
X	X	X	X	X	**Bills**	**28**
3				**Aches And Pains**	**Gray Hair**	**37**
X	X	X	X	X	**Sleep**	**52**

QUES #3 NAME SOMETHING SOME PEOPLE REFUSE TO WEAR.

FAST MONEY QUESTIONS **MC SIDE**

FM 1 IF THEY SOLD "FIRST LADY" DOLLS, WHICH ONE WOULD BE THE BIGGEST SELLER?
FM 2 NAME SOMETHING MEN AND BEARS HAVE IN COMMON.
FM 3 NAME SOMETHING THAT SHOULD BE AGAINST THE LAW TO DO AT A MOVIE THEATER.
FM 4 IF CATS WORE BACKPACKS, NAME SOMETHING THEY WOULD CARRY IN THEM.
FM 5 NAME SOMETHING THAT COMES FROM GERMANY.

Helmet 4

JACKIE KENNEDY 48 | MICHELLE OBAMA 26 | NANCY REAGAN 8

X X X X X

HAIRY 38 | LIKE TO SLEEP 14 | SNORING 9

X X X X X

TALK/CELL PHONE 71 | MAKE OUT 10 | SMOKE 6

X X X X X

CATNIP 52 | FOOD/MICE 30 | CAT TOYS/YARN 9

X X X X X

QUALITY CARS 36 | BEER 24 | CUCKOO CLOCKS 10

Underwear 24

HILLARY CLINTON 5 | ELANOR ROOSEVELT 5 | BARBARA BUSH 3

Hat 23

KILL/AGGRESSIVE 6 | LIKE TO GROWL 5 | HUGGABLE 5

Shoes 11

CHEW GUM 3 | BRING BABIES 3 | TEXT MESSAGE 2

Coat/Jacket 8

KITTY LITTER 3 | KITTENS 2

Wig 4

CHOCOLATE 9 | SAUERKRAUT 6 | BRATWURST/SAUSAGE 5

▼ *FOLD LINE* ▼

GAME 8

Helmet 4

JACKIE KENNEDY 48 | MICHELLE OBAMA 26 | NANCY REAGAN 8

X X X X X

HAIRY 38 | LIKE TO SLEEP 14 | SNORING 9

X X X X X

TALK/CELL PHONE 71 | MAKE OUT 10 | SMOKE 6

X X X X X

CATNIP 52 | FOOD/MICE 30 | CAT TOYS/YARN 9

X X X X X

QUALITY CARS 36 | BEER 24 | CUCKOO CLOCKS 10

Underwear 24

HILLARY CLINTON 5 | ELANOR ROOSEVELT 5 | BARBARA BUSH 3

Hat 23

KILL/AGGRESSIVE 6 | LIKE TO GROWL 5 | HUGGABLE 5

Shoes 11

CHEW GUM 3 | BRING BABIES 3 | TEXT MESSAGE 2

Coat/Jacket 8

KITTY LITTER 3 | KITTENS 2

Wig 4

CHOCOLATE 9 | SAUERKRAUT 6 | BRATWURST/SAUSAGE 5

QUES #1 NAME A PUNISHMENT THAT KIDS WOULD LOVE TO GIVE THEIR PARENTS. MC SIDE

QUES #2 NAME A REASON NO ONE WOULD WANT TO BE AROUND YOU FIRST THING IN THE MORNING.

X	X	X	X	X	Time-Out	52
X	X	X	X	X	Bad Breath	37
X	X	X	X	X	Grounded	28
X	X	X	X	X	Grumpy	20
X	X	X	X	X	No TV	11
X	X	X	X	X	Bad Hair Day	19
X	X	X	X	X	Spanking	10
X	X	X	X	X	Hungry	9
X	X	X	X	X	Restrict Money	8
X	X	X	X	X	X X X X X	

▼ *FOLD LINE* ▼

GAME 9

X	X	X	X	X	X X X X X	
X	X	X	X	X	8	Restrict Money
X	X	X	X	X	9	Hungry
X	X	X	X	X	10	Spanking
X	X	X	X	X	19	Bad Hair Day
X	X	X	X	X	11	No TV
X	X	X	X	X	20	Grumpy
X	X	X	X	X	28	Grounded
X	X	X	X	X	37	Bad Breath
X	X	X	X	X	52	Time-Out

QUES #3 NAME SOMETHING THAT PILES UP WHEN THERE'S A NEW BABY IN THE HOUSE.

FAST MONEY QUESTIONS **MC SIDE**

FM 1 NAME AN OLD MOVIE THAT JUST ABOUT EVERYONE HAS SEEN AT LEAST ONCE.
FM 2 NAME A KIND OF BUSINESS THAT USED TO GIVE BETTER SERVICE.
FM 3 WHICH STATE PRODUCED THE MOST MISS AMERICAS?
FM 4 NAME SOMETHING SPECIFIC FOR WHICH PEOPLE WANT QUICK RELIEF?
FM 5 NAME A REALITY SHOW WHERE PEOPLE CRY AT THE DROP OF A HAT.

X X X X X **Diapers 58**

GONE WITH THE WIND 23 WIZARD OF OZ 18 CASABLANCA 8 IT'S A WONDERFUL LIFE 7 GREASE 5 OLD YELLER 4

X X X X X **Tension/Stress 14**

GAS STATION 33 AIRLINE 14 BANKING 7 PHONE COMPANY 7 RETAIL/CLOTHING 7 RESTAURANT 6

X X X X X **Clothes/Laundry 11**

CALIFORNIA 40 TEXAS 18 GEORGIA 6 ALABAMA 5 NEW YORK 5 FLORIDA 2

X X X X X **Bills 8**

HEADACHE 76 HEARTBURN 6 TOOTHACHE 5 STOMACH ACHE 3 BACK PAIN 2 CREDIT CARDS/DEBT 2

X X X X X X X X X X

BIGGEST LOSER 31 SURVIVOR 14 REAL HOUSEWIVES 9 AMERICAN IDOL 6 EXTREME MAKEOVER: HOME EDITION 6 INTERVENTION 5

▼ *FOLD LINE* ▼

X X X X X **Diapers 58**

GONE WITH THE WIND 23 WIZARD OF OZ 18 CASABLANCA 8 IT'S A WONDERFUL LIFE 7 GREASE 5 OLD YELLER 4

X X X X X **Tension/Stress 14**

GAS STATION 33 AIRLINE 14 BANKING 7 PHONE COMPANY 7 RETAIL/CLOTHING 7 RESTAURANT 6

X X X X X **Clothes/Laundry 11**

CALIFORNIA 40 TEXAS 18 GEORGIA 6 ALABAMA 5 NEW YORK 5 FLORIDA 2

X X X X X **Bills 8**

HEADACHE 76 HEARTBURN 6 TOOTHACHE 5 STOMACH ACHE 3 BACK PAIN 2 CREDIT CARDS/DEBT 2

X X X X X X X X X X

BIGGEST LOSER 31 SURVIVOR 14 REAL HOUSEWIVES 9 AMERICAN IDOL 6 EXTREME MAKEOVER: HOME EDITION 6 INTERVENTION 5

QUES #1 NAME A COUNTRY WHERE YOU THINK THE UNITED STATES HAS SPIES.

MC SIDE

QUES #2 NAME SOMETHING SPECIFIC THAT PEOPLE CLIMB.

Iran				**5**	**Russia**	**37**
X	X	X	X	X	**Mountains**	**54**
Germany				**4**	**Iraq**	**17**
X	X	X	X	X	**Trees**	**28**
X	X	X	X	X	**Afghanistan**	**11**
X	X	X	X	X	**Stairs/Steps**	**7**
X	X	X	X	X	**China**	**7**
X	X	X	X	X	**Ladder**	**6**
X	X	X	X	X	**Japan**	**7**
X	X	X	X	X	**Rocks**	**3**

▼ *FOLD LINE* ▼

GAME 10

Russia	**37**	**Iran**				**5**
Mountains	**54**	X	X	X	X	X
Iraq	**17**	**Germany**				**4**
Trees	**28**	X	X	X	X	X
Afghanistan	**11**	X	X	X	X	X
Stairs/Steps	**7**	X	X	X	X	X
China	**7**	X	X	X	X	X
Ladder	**6**	X	X	X	X	X
Japan	**7**	X	X	X	X	X
Rocks	**3**	X	X	X	X	X

QUES #3 FOR WHOM DO YOU MOST ENJOY SHOPPING?

FAST MONEY QUESTIONS **MC SIDE**

FM 1 NAME SOMETHING THAT BECOMES MORE COMFORTABLE THE LONGER YOU HAVE IT.
FM 2 NAME A PLACE A WIFE GOES TO BLOW OFF STEAM WHEN SHE'S MAD AT HER HUSBAND.
FM 3 NAME A PLACE BABIES LIKE TO BE.
FM 4 NAME A PHRASE THAT STARTS WITH THE WORD "BOTTOM".
FM 5 NAME AN EXPRESSION OR PHRASE WITH THE WORD "SKINNY" IN IT.

X	X	X	X	X	**Myself**		**54**
SHOES/SLIPPER 37	CLOTHES/JEANS 25	CHAIR 9			MAIN SQUEEZE 8	PILLOW 3	COUCH 3
X	X	X	X	X	**Children**		**11**
MALL/STORE 35	BEDROOM 12	FRIEND'S HOUSE 12			BATHROOM 11	BAR/CLUB 9	THE GYM 4
X	X	X	X	X	**Spouse/Mate**		**8**
IN PARENT'S ARMS 60	CRIB/CANDLE 15	SWING/PLAY AREA 6			SNUGGLED IN A BLANKET 4	STORE/GYMBOREE 4	IN THE WOMB 3
X	X	X	X	X	**Grandchildren**		**7**
BOTTOMS UP 46	BOTTOM OF THE BARREL 13	BOTTOM FEEDER 8			BOTTOM LINE 8	BOTTOM OUT 6	BOTTOM DWELLER 3
X	X	X	X	X	X	X	X
SKINNY-DIP 46	SKINNY MINNIE 12	SKINNY JEANS 11			THE SKINNY 8	SKINNY AS A RAIL 6	SKINNY LATTE 4

▼ *FOLD LINE* ▼

X	X	X	X	X	**Myself**		**54**
SHOES/SLIPPER 37	CLOTHES/JEANS 25	CHAIR 9			MAIN SQUEEZE 8	PILLOW 3	COUCH 3
X	X	X	X	X	**Children**		**11**
MALL/STORE 35	BEDROOM 12	FRIEND'S HOUSE 12			BATHROOM 11	BAR/CLUB 9	THE GYM 4
X	X	X	X	X	**Spouse/Mate**		**8**
IN PARENT'S ARMS 60	CRIB/CANDLE 15	SWING/PLAY AREA 6			SNUGGLED IN A BLANKET 4	STORE/GYMBOREE 4	IN THE WOMB 3
X	X	X	X	X	**Grandchildren**		**7**
BOTTOMS UP 46	BOTTOM OF THE BARREL 13	BOTTOM FEEDER 8			BOTTOM LINE 8	BOTTOM OUT 6	BOTTOM DWELLER 3
X	X	X	X	X	X	X	X
SKINNY-DIP 46	SKINNY MINNIE 12	SKINNY JEANS 11			THE SKINNY 8	SKINNY AS A RAIL 6	SKINNY LATTE 4

QUES #1 NAME A FICTIONAL CHARACTER WHO HAS GREAT STRENGTH.

MC SIDE

QUES #2 NAME SOMETHING SPECIFIC THAT PEOPLE PICKLE.

Popeye	**3**
X X X X X	
X X X X X	
X X X X X	
X X X X X	
X X X X X	
X X X X X	
X X X X X	
X X X X X	
X X X X X	

Superman	**37**
Cucumbers	**54**
Hercules	**17**
Pig's Feet	**28**
Spider-Man	**11**
Beets	**7**
Incredible Hulk	**7**
Tomatoes	**6**
He-Man	**7**
Eggs	**3**

▼ *FOLD LINE* ▼

GAME 11

Eggs	**3**
He-Man	**7**
Tomatoes	**6**
Incredible Hulk	**7**
Beets	**7**
Spider-Man	**11**
Pig's Feet	**28**
Hercules	**17**
Cucumbers	**54**
Superman	**37**

X X X X X

X X X X X

X X X X X

X X X X X

X X X X X

X X X X X

X X X X X

X X X X X

X X X X X

X X X X X

Popeye **3**

QUES #3 NAME A TOPIC OF CONVERSATION AT MEN'S POKER GAMES.

FAST MONEY QUESTIONS **MC SIDE**

FM 1 NAME SOMETHING THAT DEVELOPS.
FM 2 NAME A FAMOUS PATTY.
FM 3 NAME A GORGEOUS ACTRESS WHO CAN'T KEEP A GUY.
FM 4 NAME A WORD THAT ENDS WITH "MATE".
FM 5 NAME SOMETHING THAT GETS ALL SHOOK UP.

X	X	X	X	X	**Women**	**74**
FILM/PICTURES 47	PEOPLE/CHILDREN 13	PLANTS/FLOWERS 7			WEATHER/STORM 5	AILMENT/ILLNESS 5
X	X	X	X	X	**Sports**	**16**
PATTY DUKE 38	PATTY HEARST 35	PATTI PAGE 6			PATTI LABELLE 5	PEPPERMINT PATTY 4
X	X	X	X	X	**Job**	**3**
JENNIFER ANISTON 26	ELIZABETH TAYLOR 22	SANDRA BULLOCK 17			HALLE BERRY 7	PAMELA ANDERSON 4
X	X	X	X	X	**Money**	**3**
CHECKMATE 39	SOUL MATE 13	PLAYMATE 10			STALEMATE 7	ROOMMATE 7	SHIPMATE 6
X	X	X	X	X	**Car**	**2**
COCKTAIL/MARTINI 23	MILK/MILKSHAKE 21	SALAD DRESSING 9			JUICE/LEMONADE 8	SCRAMBLED EGGS 4	STOMACH/NERVES 4

▼ *FOLD LINE* ▼

X	X	X	X	X	**Women**	**74**
FILM/PICTURES 47	PEOPLE/CHILDREN 13	PLANTS/FLOWERS 7			WEATHER/STORM 5	AILMENT/ILLNESS 5
X	X	X	X	X	**Sports**	**16**
PATTY DUKE 38	PATTY HEARST 35	PATTI PAGE 6			PATTI LABELLE 5	PEPPERMINT PATTY 4
X	X	X	X	X	**Job**	**3**
JENNIFER ANISTON 26	ELIZABETH TAYLOR 22	SANDRA BULLOCK 17			HALLE BERRY 7	PAMELA ANDERSON 4
X	X	X	X	X	**Money**	**3**
CHECKMATE 39	SOUL MATE 13	PLAYMATE 10			STALEMATE 7	ROOMMATE 7	SHIPMATE 6
X	X	X	X	X	**Car**	**2**
COCKTAIL/MARTINI 23	MILK/MILKSHAKE 21	SALAD DRESSING 9			JUICE/LEMONADE 8	SCRAMBLED EGGS 4	STOMACH/NERVES 4

QUES #1 NAME A SPORT THAT DOES NOT CONTAIN THE WORD “BALL”.

MC SIDE

QUES #2 NAME AN IMPORTANT CITY IN THE ART WORLD.

X	X	X	X	X	**Hockey**	**32**
X	X	X	X	X	**Paris**	**44**
X	X	X	X	X	**Soccer**	**27**
X	X	X	X	X	**New York**	**28**
X	X	X	X	X	**Golf**	**13**
X	X	X	X	X	**Rome**	**10**
X	X	X	X	X	**Tennis**	**11**
X	X	X	X	X	**Philadelphia**	**6**
X	X	X	X	X	**Swimming**	**5**
X	X	X	X	X	**Venice**	**6**

▼ *FOLD LINE* ▼

GAME 12

X	X	X	X	X	**Venice**	**6**
X	X	X	X	X	**Swimming**	**5**
X	X	X	X	X	**Philadelphia**	**6**
X	X	X	X	X	**Tennis**	**11**
X	X	X	X	X	**Rome**	**10**
X	X	X	X	X	**Golf**	**13**
X	X	X	X	X	**New York**	**28**
X	X	X	X	X	**Soccer**	**27**
X	X	X	X	X	**Paris**	**44**
X	X	X	X	X	**Hockey**	**32**

QUES #3 NAME SOMETHING PEOPLE DO AT A SURPRISE PARTY BEFORE THEY YELL "SURPRISE."

FAST MONEY QUESTIONS **MC SIDE**

FM 1 NAME ONE THING THAT CAN MAKE A BAD JOB EVEN WORSE.
FM 2 NAME SOMETHING THAT REMINDS YOU OF NEW ORLEANS.
FM 3 NAME A SLANG TERM FOR SOMEONE WHO'S AFRAID.
FM 4 TELL ME SOMETHING A POLICE OFFICER WOULD HATE TO RUN OUT OF.
FM 5 NAME SOMETHING A BANK ROBBER NEEDS TO DO HIS JOB.

X	X	X	X	X	**Hide**		**62**
THE BOSS 42		LOW PAY/CUT 27		RUDE COWORKERS 10	LONG HOURS 5	POOR ATTITUDE 4 TOO MUCH WORK 3	
X	X	X	X	X	**Flip Light Switch**		**18**
MARDI GRAS/BEADS 38		CAJUN FOOD 18		JAZZ/BLUES 17	HURRICANE KATRINA 17	BOURBON ST./FRENCH QUARTER 7	
X	X	X	X	X	**Quiet Down**		**8**
SCAREDY-CAT 55		CHICKEN 24		PUNK 13	COWARD 6	SISSY 2	
X	X	X	X	X	**Have Drinks**		**8**
BULLETS 65		TICKETS 17		COFFEE 4	GASOLINE 4	DONUTS 3	HANDCUFFS 2
X	X	X	X	X	**Jump Out**		**3**
A GUN 33		A MASK 30		BAG FOR THE MONEY 8	GETAWAY CAR 7	A BANK 6	GUTS 4

▼ *FOLD LINE* ▼

X	X	X	X	X	**Hide**		**62**
THE BOSS 42		LOW PAY/CUT 27		RUDE COWORKERS 10	LONG HOURS 5	POOR ATTITUDE 4 TOO MUCH WORK 3	
X	X	X	X	X	**Flip Light Switch**		**18**
MARDI GRAS/BEADS 38		CAJUN FOOD 18		JAZZ/BLUES 17	HURRICANE KATRINA 17	BOURBON ST./FRENCH QUARTER 7	
X	X	X	X	X	**Quiet Down**		**8**
SCAREDY-CAT 55		CHICKEN 24		PUNK 13	COWARD 6	SISSY 2	
X	X	X	X	X	**Have Drinks**		**8**
BULLETS 65		TICKETS 17		COFFEE 4	GASOLINE 4	DONUTS 3	HANDCUFFS 2
X	X	X	X	X	**Jump Out**		**3**
A GUN 33		A MASK 30		BAG FOR THE MONEY 8	GETAWAY CAR 7	A BANK 6	GUTS 4

QUES #1 NAME SOMETHING THAT IS THROWN AT WEDDINGS.

MC SIDE

QUES #2 NAME A PIECE OF JEWELRY WORN BY EITHER SEX.

X	X	X	X	X	**Rice**	**72**
X	X	X	X	X	**Rings**	**52**
X	X	X	X	X	**Bouquet/Flowers**	**20**
X	X	X	X	X	**Earrings**	**15**
X	X	X	X	X	**Confetti**	**4**
X	X	X	X	X	**Watch**	**14**
X	X	X	X	X	**Garter**	**2**
X	X	X	X	X	**Necklace**	**12**
X	X	X	X	X	X X X X X	
X	X	X	X	X	**Bracelets**	**7**

▼ *FOLD LINE* ▼

GAME 13

X	X	X	X	X	**Bracelets**	**7**
X	X	X	X	X	X X X X X	
X	X	X	X	X	**Necklace**	**12**
X	X	X	X	X	**Garter**	**2**
X	X	X	X	X	**Watch**	**14**
X	X	X	X	X	**Confetti**	**4**
X	X	X	X	X	**Earrings**	**15**
X	X	X	X	X	**Bouquet/Flowers**	**20**
X	X	X	X	X	**Rings**	**52**
X	X	X	X	X	**Rice**	**72**

QUES #3 MEN ARE COMPARED TO BEARS, WHAT'S AN ANIMAL A WOMAN MIGHT BE COMPARED TO?

FAST MONEY QUESTIONS **MC SIDE**

FM 1 NAME A WELL-KNOWN JOHNNY.
FM 2 TELL ME SOMETHING NEIGHBORS FIGHT OVER.
FM 3 GIVE ANOTHER NAME FOR "PRISON."
FM 4 NAME A SPECIAL DAY FOR WHICH PEOPLE BUY NEW OUTFITS.
FM 5 NAME A MONSTER THAT JUST WANTED TO BE LOVED.

Sheep/Lamb 4

JOHNNY CARSON 36	JOHNNY DEPP 34	JOHNNY CASH 16
X	X	X
PARKING 23	NOISE/LOUD MUSIC 21	KIDS 21
X	X	X
JAIL 46	INCARCERATION 17	THE BIG HOUSE 11
X	X	X
EASTER 57	CHRISTMAS 14	WEDDINGS 9
X	X	X
KING KONG 45	SHREK 19	FRANKENSTEIN 12

Cat/Kitten 55

JOHNNY BRAVO 3	JOHNNY APPLESEED 2	JOHNNY KNOXVILLE 2

Deer 7

PROPERTY LINE 21	MAINTAINING LAWN 7	PETS 5

Fox 7

SING SING 6	CORRECTIONAL FACILITY 6	THE SLAMMER 5

Tiger 6

BIRTHDAY 6	VALENTINES DAY 3	4TH OF JULY 2

Lioness 4

INCREDIBLE HULK 5	HERMAN MUNSTER 3	DRACULA 2

▼ *FOLD LINE* ▼

Cat/Kitten 55

JOHNNY CARSON 36 JOHNNY DEPP 34 JOHNNY CASH 16

Deer 7

PARKING 23 NOISE/LOUD MUSIC 21 KIDS 21

Fox 7

JAIL 46 INCARCERATION 17 THE BIG HOUSE 11

Tiger 6

EASTER 57 CHRISTMAS 14 WEDDINGS 9

Lioness 4

KING KONG 45 SHREK 19 FRANKENSTEIN 12

Sheep/Lamb 4

JOHNNY BRAVO 3 JOHNNY APPLESEED 2 JOHNNY KNOXVILLE 2

PROPERTY LINE 21 MAINTAINING LAWN 7 PETS 5

SING SING 6 CORRECTIONAL FACILITY 6 THE SLAMMER 5

BIRTHDAY 6 VALENTINES DAY 3 4TH OF JULY 2

INCREDIBLE HULK 5 HERMAN MUNSTER 3 DRACULA 2

QUES #1 NAME SOMETHING TWINS MIGHT SHARE WHILE GROWING UP.

MC SIDE

QUES #2 NAME AN OCCUPATION IN WHICH SCANDALS ARE ALWAYS HAPPENING.

X X X X X	**Clothes 54**
Policeman 3	**Politician 47**
X X X X X	**Bedroom 30**
X X X X X	**Actor/Musician 24**
X X X X X	**Friends/Boyfriend 4**
X X X X X	**Priest 4**
X X X X X	**Toys 3**
X X X X X	**Banker 4**
X X X X X X X X X X	
X X X X X	**Lawyer 4**

▼ *FOLD LINE* ▼

GAME 14

X X X X X	**Lawyer 4**
X X X X X X X X X X	
X X X X X	**Banker 4**
X X X X X	**Toys 3**
X X X X X	**Priest 4**
X X X X X	**Friends/Boyfriend 4**
X X X X X	**Actor/Musician 24**
X X X X X	**Bedroom 30**
X X X X X	**Politician 47**
Policeman 3	
X X X X X	**Clothes 54**

QUES #3 NAME SOMETHING YOU BORROW FROM THE NEIGHBORS WHEN YOU'RE HAVING A PARTY.

FAST MONEY QUESTIONS **MC SIDE**

FM 1 NAME AN ANIMAL YOU'D EXPECT TO SEE IN MEXICO.
FM 2 NAME SOMETHING YOU'D HATE TO BE ON WHEN IT BREAKS DOWN.
FM 3 NAME AN EXCUSE FOR LATENESS THAT BOSSES GET SICK OF HEARING.
FM 4 WHAT DO YOU THINK OF WHEN YOU HEAR THE WORD "PARIS"?
FM 5 REAL OR FICTIONAL, NAME A FAMOUS "PAUL".

Food/Drink 7

DONKEY/MULE 23 | CHIHUAHUA/DOG 22 | LIZARD/IGUANA 20

X X X X X

AIRPLANE 25 | BUS 21 | FERRIS WHEEL 13

X X X X X

TRAFFIC 44 | OVERSLEPT 15 | CAR BROKE DOWN 13

X X X X X

FRENCH CITY 39 | EIFFEL TOWER 26 | PARIS HILTON 11

X X X X X

PAUL NEWMAN 25 | PAUL MCCARTNEY 19 | PAUL BUNYAN 17

Chairs 37

MONKEY 5 | ARMADILLO 4

Ice 11

ROLLER COASTER 10 | BOAT/SHIP 7 | TRAIN/SUBWAY 6

Dishes/Bowls 11

LATE BUS/MISS BUS 12 | ALARM CLOCK 8

Tables 10

TRAVEL/VACATION 6 | CLOTHES/FASHION 3 | WINE 3

Grill 8

PAUL REVERE 15 | PAUL MASON WINE 5 | PAUL WALKER 5

▼ *FOLD LINE* ▼

PAUL WALKER 5 | PAUL MASON WINE 5 | PAUL REVERE 15

X X X X X

WINE 3 | CLOTHES/FASHION 3 | TRAVEL/VACATION 6

X X X X X

ALARM CLOCK 8 | LATE BUS/MISS BUS 12

X X X X X

TRAIN/SUBWAY 6 | BOAT/SHIP 7 | ROLLER COASTER 10

X X X X X

ARMADILLO 4 | MONKEY 5

Food/Drink 7

CAR BROKE DOWN 13 | OVERSLEPT 15 | TRAFFIC 44

FERRIS WHEEL 13 | BUS 21 | AIRPLANE 25

LIZARD/IGUANA 20 | CHIHUAHUA/DOG 22 | DONKEY/MULE 23

PAUL BUNYAN 17 | PAUL MCCARTNEY 19 | PAUL NEWMAN 25

PARIS HILTON 11 | EIFFEL TOWER 26 | FRENCH CITY 39

QUES #1 NAME A PLACE ON THEIR BODIES WHERE EVEN ADULTS FORGET TO WASH.

MC SIDE

QUES #2 NAME SOMETHING THAT MIGHT FALL OFF THE BED IN THE MIDDLE OF THE NIGHT.

Face	5
X X X X X	
X X X X X	
X X X X X	
X X X X X	
X X X X X	
X X X X X	
X X X X X	
X X X X X	
X X X X X	

Ears	59
Pillow	34
Feet/Toes	10
Blanket/Covers	32
Belly/Navel	9
Remote Control	10
Hands	6
Yourself	5
Back	5
Partner	5

▼ *FOLD LINE* ▼

GAME 15

Partner	5
X X X X X	
Back	5
X X X X X	
Yourself	5
X X X X X	
Hands	6
X X X X X	
Remote Control	10
X X X X X	
Belly/Navel	9
X X X X X	
Blanket/Covers	32
X X X X X	
Feet/Toes	10
X X X X X	
Pillow	34
X X X X X	
Ears	59
Face	5

QUES #3 NAME SOMETHING YOU DO EVERY DAY THAT THE QUEEN OF ENGLAND HAS NEVER DONE.

FAST MONEY QUESTIONS **MC SIDE**

FM 1 NAME SOMETHING GORILLAS DO EVERY DAY.
FM 2 TELL ME A FAMOUS "DENNIS."
FM 3 NAME ONE OF THE APPROXIMATELY TEN WORDS TEENAGERS USE.
FM 4 NAME A FAMOUS PERSON WHOSE LAST NAME IS GIBSON.
FM 5 NAME SOMETHING THAT COMES THROUGH THE WINDOW.

X X X X X

Housework/Laundry 37

SCRATCH 26 | EAT/BANANAS 25 | BEAT THEIR CHESTS 19 | GRUNT/MAKE NOISE 14 | JUMP AROUND 6 | GROOM EACH OTHER 6

X X X X X

Work 11

DENNIS THE MENACE 62 | DENNIS HOPPER 14 | DENNIS QUAID 9 | DENNIS RODMAN 8 | DENNIS MILLER 6

X X X X

Cook 11

LIKE 18 | COOL 15 | WHATEVER 15 | DUDE 7 | DUH 7

X X X X X

Drive 10

MEL GIBSON 79 | DEBBIE GIBSON 5 | BOB GIBSON 4 | HENRY GIBSON 4 | CHARLIE GIBSON 4 | HOOT GIBSON 2

X X X X X

Dress Herself 8

AIR/BREEZE 46 | BIRD 12 | SUNLIGHT 12 | INSECTS 11 | BURGLAR 7 | BALL 4

▼ *FOLD LINE* ▼

X X X X X

Housework/Laundry 37

SCRATCH 26 EAT/BANANAS 25 BEAT THEIR CHESTS 19 GRUNT/MAKE NOISE 14 JUMP AROUND 6 GROOM EACH OTHER 6

X X X X X

Work 11

DENNIS THE MENACE 62 DENNIS HOPPER 14 DENNIS QUAID 9 DENNIS RODMAN 8 DENNIS MILLER 6

X X X X X

Cook 11

LIKE 18 COOL 15 WHATEVER 15 DUDE 7 DUH 7

X X X X X

Drive 10

MEL GIBSON 79 DEBBIE GIBSON 5 BOB GIBSON 4 HENRY GIBSON 4 CHARLIE GIBSON 4 HOOT GIBSON 2

X X X X X

Dress Herself 8

AIR/BREEZE 46 BIRD 12 SUNLIGHT 12 INSECTS 11 BURGLAR 7 BALL 4

QUES #1 NAME SOMETHING YOU'D BRING TO A NUDIST CAMP. **MC SIDE**

QUES #2 TELL ME SOMETHING PEOPLE GROPE FOR IN THE DARK.

X	X	X	X	X	**Sunblock**	**23**
X	X	X	X	X	**Light Switch**	**45**
X	X	X	X	X	**Towel/Blanket**	**15**
X	X	X	X	X	**Flashlight**	**15**
X	X	X	X	X	**Sunglasses**	**12**
X	X	X	X	X	**Phone**	**13**
X	X	X	X	X	**Hats**	**6**
X	X	X	X	X	**Glasses**	**11**
X	X	X	X	X	X X X X X	
X	X	X	X	X	X X X X X	

▼ *FOLD LINE* ▼

GAME 16

X	X	X	X	X	X X X X X	
X	X	X	X	X	X X X X X	
X	X	X	X	X	**11**	**Glasses**
X	X	X	X	X	**6**	**Hats**
X	X	X	X	X	**13**	**Phone**
X	X	X	X	X	**12**	**Sunglasses**
X	X	X	X	X	**15**	**Flashlight**
X	X	X	X	X	**15**	**Towel/Blanket**
X	X	X	X	X	**45**	**Light Switch**
X	X	X	X	X	**23**	**Sunblock**

QUES #3 NAME SOMETHING THAT FLIES.

FAST MONEY QUESTIONS **MC SIDE**

FM 1 NAME SOMETHING YOU'D DO IF THE BOSS CAME TO WORK IN HIS PAJAMAS.
FM 2 TELL ME WHICH PRESIDENT DID THE WORST JOB.
FM 3 NAME SOMETHING THAT STARTS WITH THE WORD "SHOCK."
FM 4 NAME A JOB WHERE YOU DO A LOT OF NEGOTIATING.
FM 5 IF TWO FARMERS GOT IN A FIGHT, NAME SOMETHING THEY'D USE AS WEAPONS.

X X X X X **Birds** **41**

LAUGH 64 WEAR MINE ALSO 12 NOTHING/IGNORE 6 HOLD IN LAUGHTER 4 TAKE A PICTURE 3 MAKE CALL/GOSSIP 3

X X X X X **Planes** **32**

GEORGE W. BUSH 53 JIMMY CARTER 17 RICHARD NIXON 12 BILL CLINTON 9 LYNDON B. JOHNSON 2

X X X X X **Bugs** **22**

SHOCKWAVE 52 SHOCK ABSORBER 11 SHOCK JOCK 9 SHOCK TREATMENT 5 SHOCKER 4 SHOCK TARTS 4

X X X X X **Superman** **5**

LAWYER 40 SALES PERSON 27 STOCK BROKER 6 POLITICIAN 4 REAL ESTATE 2 AUCTIONEER 2

X X X X X X X X X X

PITCHFORK 60 HOE 9 SHOTGUN/RIFLE 6 SHOVEL/SPADE 6 RAKE 3 TRACTOR/COMBINE 3

▼ *FOLD LINE* ▼

X X X X X **Birds** **41**

LAUGH 64 WEAR MINE ALSO 12 NOTHING/IGNORE 6 HOLD IN LAUGHTER 4 TAKE A PICTURE 3 MAKE CALL/GOSSIP 3

X X X X X **Planes** **32**

GEORGE W. BUSH 53 JIMMY CARTER 17 RICHARD NIXON 12 BILL CLINTON 9 LYNDON B. JOHNSON 2

X X X X X **Bugs** **22**

SHOCKWAVE 52 SHOCK ABSORBER 11 SHOCK JOCK 9 SHOCK TREATMENT 5 SHOCKER 4 SHOCK TARTS 4

X X X X X **Superman** **5**

LAWYER 40 SALES PERSON 27 STOCK BROKER 6 POLITICIAN 4 REAL ESTATE 2 AUCTIONEER 2

X X X X X X X X X X

PITCHFORK 60 HOE 9 SHOTGUN/RIFLE 6 SHOVEL/SPADE 6 RAKE 3 TRACTOR/COMBINE 3

QUES #1 NAME SOMETHING YOU'D STEAL FROM A HOTEL ROOM. **MC SIDE**

QUES #2 TELL ME SOMETHING A WAITER CAN DO FOR REVENGE WHEN A CUSTOMER IS NASTY TO HIM.

X	X	X	X	X	**Towels**	**23**
X	X	X	X	X	**Spit In Food**	**61**
X	X	X	X	X	**Shampoo**	**10**
X	X	X	X	X	**Slow Service**	**18**
X	X	X	X	X	**Ashtray**	**8**
X	X	X	X	X	**Spill Something**	**9**
X	X	X	X	X	**Soap**	**8**
X	X	X	X	X	**Bad Attitude**	**5**
X	X	X	X	X	X X X X X	
X	X	X	X	X	**Finger In Food**	**3**

▼ *FOLD LINE* ▼

GAME 17

X	X	X	X	X	**Finger In Food**	**3**
X	X	X	X	X	X X X X X	
X	X	X	X	X	**Bad Attitude**	**5**
X	X	X	X	X	**Soap**	**8**
X	X	X	X	X	**Spill Something**	**9**
X	X	X	X	X	**Ashtray**	**8**
X	X	X	X	X	**Slow Service**	**18**
X	X	X	X	X	**Shampoo**	**10**
X	X	X	X	X	**Spit In Food**	**61**
X	X	X	X	X	**Towels**	**23**

QUES #3 NAME A SPORT YOU WOULD BE SURPRISED TO SEE YOUR DAUGHTER PLAYING.

FAST MONEY QUESTIONS **MC SIDE**

FM 1 NAME A KIND OF PERSON WHO HEARS EVERY EXCUSE IN THE BOOK.
FM 2 NAME SOMETHING THAT DECREASES IN VALUE EACH YEAR.
FM 3 NAME SOMEONE WHO'S ON A CRUSADE TO FIGHT GLOBAL WARMING.
FM 4 NAME SOMETHING YOU'D SEE ON THE COVER OF AN EASTER CARD.
FM 5 GIVE ME A GIRL'S NAME THAT STARTS WITH "T".

X X X X X **Football 56**

POLICE OFFICER 19 TEACHER 18 JUDGE 10 DOCTOR 9 LAWYER 7 BOSS 6

X X X X X **Hockey 15**

CAR 56 HOUSE/LAND 12 A DOLLAR 9 INSURANCE 4 SAVINGS 4 CLOTHES 3

X X X X X **Wrestling 10**

AL GORE 77 RALPH NADER 3 HILLARY CLINTON 3 BRAD PITT 2 OPRAH WINFREY 2

X X X X X **Basketball 9**

BUNNY 66 EGG 13 CROSS 9 FLOWERS 8 JESUS CHRIST 2

X X X X X X X X X X

TERESA/TERRY 40 TINA 20 TIFFANY 9 TANYA 7 TARA 4

▼ *FOLD LINE* ▼

TERESA/TERRY 40 TINA 20 TIFFANY 9 TANYA 7 TARA 4

X X X X X X X X X X

BUNNY 66 EGG 13 CROSS 9 FLOWERS 8 JESUS CHRIST 2

X X X X X **Basketball 9**

AL GORE 77 RALPH NADER 3 HILLARY CLINTON 3 BRAD PITT 2 OPRAH WINFREY 2

X X X X X **Wrestling 10**

CAR 56 HOUSE/LAND 12 A DOLLAR 9 INSURANCE 4 SAVINGS 4 CLOTHES 3

X X X X X **Hockey 15**

POLICE OFFICER 19 TEACHER 18 JUDGE 10 DOCTOR 9 LAWYER 7 BOSS 6

X X X X X **Football 56**

QUES #1 NAME SOMETHING FAMILY DOES TOGETHER AT CHRISTMAS. **MC SIDE**

QUES #2 NAME SOMETHING YOU'D HAVE A HARD TIME DOING IF YOU DIDN'T HAVE LIPS.

X	X	X	X	X	**Eat**	**46**
X	X	X	X	X	**Talking**	**43**
X	X	X	X	X	**Open Gifts**	**34**
X	X	X	X	X	**Eating/Drinking**	**13**
X	X	X	X	X	**Church/Pray**	**7**
X	X	X	X	X	**Whistling**	**8**
X	X	X	X	X	**Family Together**	**7**
X	X	X	X	X	X X X X X	
X	X	X	X	X	**Sing**	**6**
X	X	X	X	X	X X X X X	

▼ *FOLD LINE* ▼

GAME 18

X	X	X	X	X	X X X X X	
X	X	X	X	X	**Sing**	**6**
X	X	X	X	X	X X X X X	
X	X	X	X	X	**Family Together**	**7**
X	X	X	X	X	**Whistling**	**8**
X	X	X	X	X	**Church/Pray**	**7**
X	X	X	X	X	**Eating/Drinking**	**13**
X	X	X	X	X	**Open Gifts**	**34**
X	X	X	X	X	**Talking**	**43**
X	X	X	X	X	**Eat**	**46**

QUES #3 BESIDES SHAKING HANDS, NAME ANOTHER WAY PEOPLE GREET EACH OTHER.

FAST MONEY QUESTIONS **MC SIDE**

FM 1 TELL ME SOMETHING YOU JUST CAN'T WAIT TO SEE REDUCED.
FM 2 NAME SOMETHING THAT STARTS WITH "MULTI."
FM 3 WHICH COUNTRY DO YOU THINK HAS THE MOST INTERNET USERS?
FM 4 BRUCE SPRINGSTEEN WAS "BORN TO RUN." WHAT WERE YOU BORN TO DO?
FM 5 NAME A PROMISE MANY PEOPLE MAKE AND BREAK.

X X X X X **Hug** **53**

GAS PRICES 41 WEIGHT/SIZE 31 TAXES 8 INFLATION 3 CLOTHES 3

X X X X X **Kiss** **14**

MULTI TASK 28 MULTIMILLIONAIRE 12 MULTIVITAMIN 11 MULTICOLORED 8

X X X X X **Nod Head** **10**

USA 70 CHINA 14 JAPAN 7 INDIA 3 ENGLAND 2

X X X X X **Wave** **9**

WORK 18 MAKE MONEY 4 BE FREE 3 BE HAPPY 3 LEAD 3

X X X X X **Speak** **7**

LOSE WEIGHT 27 WEDDING VOWS 15 TO CALL 10 BE ON TIME 8 ALWAYS LOVE 7 QUIT SMOKING 7

▼ *FOLD LINE* ▼

QUIT SMOKING 7 ALWAYS LOVE 7 BE ON TIME 8 TO CALL 10 WEDDING VOWS 15 LOSE WEIGHT 27

X X X X X **Speak** **7**

LEAD 3 BE HAPPY 3 BE FREE 3 MAKE MONEY 4 WORK 18

X X X X X **Wave** **9**

ENGLAND 2 INDIA 3 JAPAN 7 CHINA 14 USA 70

X X X X X **Nod Head** **10**

MULTICOLORED 8 MULTIMILLIONAIRE 12 MULTIVITAMIN 11 MULTI TASK 28

X X X X X **Kiss** **14**

CLOTHES 3 INFLATION 3 TAXES 8 WEIGHT/SIZE 31 GAS PRICES 41

X X X X X **Hug** **53**

QUES #1 WHICH OF THE SEVEN DWARFS BEST DESCRIBE YOUR HUSBAND? **MC SIDE**

QUES #2 NAME A SPORT THAT WOULD BE REALLY DANGEROUS TO PLAY IN THE NUDE.

Bashful				**5**	**Grumpy**	**27**
Boxing				**3**	**Football**	**53**
X	X	X	X	X	**Dopey**	**23**
X	X	X	X	X	**Hockey**	**20**
X	X	X	X	X	**Happy**	**18**
X	X	X	X	X	**Soccer**	**9**
X	X	X	X	X	**Sleepy**	**16**
X	X	X	X	X	**Rugby**	**4**
X	X	X	X	X	**Doc**	**7**
X	X	X	X	X	**Baseball**	**3**

▼ *FOLD LINE* ▼

GAME 19

X	X	X	X	X	**3**	**Baseball**
X	X	X	X	X	**7**	**Doc**
X	X	X	X	X	**4**	**Rugby**
X	X	X	X	X	**16**	**Sleepy**
X	X	X	X	X	**9**	**Soccer**
X	X	X	X	X	**18**	**Happy**
X	X	X	X	X	**20**	**Hockey**
X	X	X	X	X	**23**	**Dopey**
			Boxing		**53**	**Football**
			Bashful		**27**	**Grumpy**
				3		
				5		

QUES #3 NAME SOMETHING PEOPLE TRY TO GET OUT OF.

FAST MONEY QUESTIONS **MC SIDE**

FM 1 WHEN YOU WERE A CHILD, NAME AN OCCUPATION YOU DREAMED OF HAVING SOMEDAY.
FM 2 NAME AN ANIMAL A FARMER'S WIFE WOULD BE UPSET IF A FARMER LET IT IN THE HOUSE.
FM 3 WE ASKED 100 MEN…NAME SOMEONE YOU'D LIKE TO HAVE FOR A BOSOM BUDDY.
FM 4 NAME SOMETHING IN YOUR HOUSE YOU WISH WOULD CLEAN ITSELF.
FM 5 NAME A ROCK STAR OR GROUP WHO LOOKS LIKE THEY'RE ALREADY DRESSED FOR HALLOWEEN.

Debt 5

NURSE 18 | DOCTOR 17 | LAWYER 8

X X X X X

PIG 51 | COW 23 | GOAT 10

X X X X X

WILL SMITH 12 | HALLE BERRY 4 | TOM CRUISE 4

X X X X X

TOILET/BATHROOM 50 | DISHES/KITCHEN 16 | FLOORS 8

X X X X X

KISS 56 | ROLLING STONES 7 | MARILYN MANSON 5

Jury Duty 30

POLICE OFFICER 8 | FIREFIGHTER 7 | ATHLETE 6

Work 18

CHICKEN 4 | BULL 2 | DOG 2

Bills/Taxes 7

TOM HANKS 4 | JENNIFER ANISTON 3

Bad Relationships 7

THE LAUNDRY 6 | CARPET/RUGS 5 | MICROWAVE 4

Traffic Tickets 6

BOY GEORGE 4 | OZZY OSBOURNE 4 | ALICE COOPER 2

▼ *FOLD LINE* ▼

Jury Duty 30

NURSE 18 | DOCTOR 17 | LAWYER 8

Work 18

PIG 51 | COW 23 | GOAT 10

Bills/Taxes 7

WILL SMITH 12 | HALLE BERRY 4 | TOM CRUISE 4

Bad Relationships 7

TOILET/BATHROOM 50 | DISHES/KITCHEN 16 | FLOORS 8

Traffic Tickets 6

KISS 56 | ROLLING STONES 7 | MARILYN MANSON 5

Debt 5

POLICE OFFICER 8 | FIREFIGHTER 7 | ATHLETE 6

CHICKEN 4 | BULL 2 | DOG 2

TOM HANKS 4 | JENNIFER ANISTON 3

THE LAUNDRY 6 | CARPET/RUGS 5 | MICROWAVE 4

BOY GEORGE 4 | OZZY OSBOURNE 4 | ALICE COOPER 2

QUES #1 WHAT WOULD YOU SAY IS THE BIGGEST EXPENSE IN A VERY LARGE FAMILY?

MC SIDE

QUES #2 WHAT IS THE MOST COMMON ORDER A BACK-SEAT DRIVER YELLS TO THE DRIVER.

X	X	X	X	X	**Food**	**72**
X	X	X	X	X	**Stop!**	**29**
X	X	X	X	X	**Education**	**13**
X	X	X	X	X	**Slow Down!**	**23**
X	X	X	X	X	**House/Rent**	**5**
X	X	X	X	X	**Watch!**	**15**
X	X	X	X	X	**Electricity**	**4**
X	X	X	X	X	**Turn Here!**	**12**
X	X	X	X	X	**Clothes**	**3**
X	X	X	X	X	**Hurry Up!**	**8**

▼ *FOLD LINE* ▼

GAME 20

X	X	X	X	X	**Hurry Up!**	**8**
X	X	X	X	X	**Clothes**	**3**
X	X	X	X	X	**Turn Here!**	**12**
X	X	X	X	X	**Electricity**	**4**
X	X	X	X	X	**Watch!**	**15**
X	X	X	X	X	**House/Rent**	**5**
X	X	X	X	X	**Slow Down!**	**23**
X	X	X	X	X	**Education**	**13**
X	X	X	X	X	**Stop!**	**29**
X	X	X	X	X	**Food**	**72**

QUES #3 NAME A REASON PARENTS MIGHT NOT APPROVE OF THEIR DAUGHTER'S BOYFRIEND.

FAST MONEY QUESTIONS **MC SIDE**

FM 1 NAME SOMETHING YOU MIGHT DO DURING A DRIVING TEST THAT WOULD MAKE YOU FAIL RIGHT AWAY.
FM 2 NAME A PHRASE OR EXPRESSION THAT STARTS WITH THE WORD "CAT."
FM 3 NAME SOMETHING A CELEBRITY DOES WHEN HE/SHE SEES THE PAPARAZZI APPROACHING.
FM 4 NAME SOMETHING THAT MIGHT REALLY ANNOY SANTA WHEN HE COMES TO YOUR HOUSE.
FM 5 A SONG MIGHT BE A "HIT." NAME SOMETHING ELSE THAT MIGHT BE A "HIT."

X X X X X **He's a "Bad Boy" 25**

HIT CAR/PERSON 23 ROLL A STOP SIGN 16 NO SEAT BELT 11 NO TURN SIGNAL 7 DRIVE WRONG SIDE 7

X X X X X **Too Old 20**

CAT GOT YOUR TONGUE 13 CAT'S MEOW 9 CATNAP 8 CAT IN THE HAT 7 CATHOUSE 7 CAT ON A HOT TIN ROOF 6

X X X X X **Has Piercings 16**

RUN/GET AWAY 35 COVER/HIDE FACE 26 HIDE 13 SMILE 11 POSE 5 DUCK 4

X X X X X **No Job 13**

NO COOKIES/MILK 28 NO TREE/DECORATIONS 18 NO CHIMNEY 17 FIRE IN FIREPLACE 14 MEAN DOG 12 MESSY HOUSE/DUST 7

X X X X X **Sloppy Dresser 11**

MOVIE 39 TV SHOW 19 DANCE 8 BROADWAY PLAY 8 BOOK 7 BASEBALL/SPORT 6

▼ *FOLD LINE* ▼

X X X X X **Sloppy Dresser 11**

MOVIE 39 TV SHOW 19 DANCE 8 BROADWAY PLAY 8 BOOK 7 BASEBALL/SPORT 6

X X X X X **No Job 13**

NO COOKIES/MILK 28 NO TREE/DECORATIONS 18 NO CHIMNEY 17 FIRE IN FIREPLACE 14 MEAN DOG 12 MESSY HOUSE/DUST 7

X X X X X **Has Piercings 16**

RUN/GET AWAY 35 COVER/HIDE FACE 26 HIDE 13 SMILE 11 POSE 5 DUCK 4

X X X X X **Too Old 20**

HIT CAR/PERSON 23 ROLL A STOP SIGN 16 NO SEAT BELT 11 NO TURN SIGNAL 7 DRIVE WRONG SIDE 7

X X X X X **He's a "Bad Boy" 25**

CAT GOT YOUR TONGUE 13 CAT'S MEOW 9 CATNAP 8 CAT IN THE HAT 7 CATHOUSE 7 CAT ON A HOT TIN ROOF 6

QUES #1 NAME A LAW YOU HAVEN'T BROKEN, BUT WOULD CONSIDER BREAKING. **MC SIDE**

QUES #2 NAME SOMETHING DRIVERS DO WHEN STUCK IN A TRAFFIC JAM.

X	X	X	X	X	**Speeding**	**31**
X	X	X	X	X	**Curse/Yell**	**33**
X	X	X	X	X	**Stealing**	**26**
X	X	X	X	X	**Honk Horn**	**24**
X	X	X	X	X	**Run A Red Light**	**9**
X	X	X	X	X	**Radio/Music**	**20**
X	X	X	X	X	**Murder**	**8**
X	X	X	X	X	**Talk On Phone**	**6**
X	X	X	X	X	**Jaywalking**	**6**
X	X	X	X	X	**Sing**	**5**

▼ *FOLD LINE* ▼

GAME 21

X	X	X	X	X	**5**	**Sing**
X	X	X	X	X	**6**	**Jaywalking**
X	X	X	X	X	**6**	**Talk On Phone**
X	X	X	X	X	**8**	**Murder**
X	X	X	X	X	**20**	**Radio/Music**
X	X	X	X	X	**9**	**Run A Red Light**
X	X	X	X	X	**24**	**Honk Horn**
X	X	X	X	X	**26**	**Stealing**
X	X	X	X	X	**33**	**Curse/Yell**
X	X	X	X	X	**31**	**Speeding**

QUES #3 BESIDES A BAR, NAME A PLACE WHERE A MAN PICKS UP WOMEN.

FAST MONEY QUESTIONS **MC SIDE**

FM 1 NAME SOMETHING A WEDDING CRASHER JUST LOVES TO DO AT WEDDINGS.
FM 2 NAME SOMETHING THAT HAS THE WORD "SUPER" IN ITS NAME.
FM 3 WE ASKED 100 PARENTS...NAME A FOOD THAT YOU LET YOUR KIDS PREPARE FOR THEMSELVES.
FM 4 NAME A SITCOM THAT'S SO FUNNY YOU LAUGH JUST AS HARD AT THE RERUNS.
FM 5 NAME A PLACE YOU'D BE MORTIFIED TO DISCOVER THERE WAS A HIDDEN CAMERA.

X X X X X **Club** **22**

DRINK 31 EAT 29 PICK UP WOMEN 11 SING 6 MAKE FOOL OF SELF 5 ARGUE/FIGHT 4

X X X X X **Church** **19**

SUPERMAN 47 SUPERMARKET 9 SUPER BOWL 9 SUPERINTENDENT 6 SUPER GLUE 6 SUPERSIZE 5

X X X X X **Supermarket** **16**

CEREAL 32 SANDWICH 30 PIZZA 9 EGGS 8 MAC & CHEESE 7

X X X X X **Laundromat** **8**

SEINFELD 14 KING OF QUEENS 8EVERYBODY LOVES RAYMOND 7 I LOVE LUCY 7 THREE'S COMPANY 6 FRIENDS 5

X X X X X X X X X X

IN A BATHROOM 72 IN A FITTING ROOM 9 IN MY BEDROOM 7 IN A TOILET 3

▼ *FOLD LINE* ▼

IN A BATHROOM 72 IN A FITTING ROOM 9 IN MY BEDROOM 7 IN A TOILET 3

X X X X X X X X X X

SEINFELD 14 KING OF QUEENS 8EVERYBODY LOVES RAYMOND 7 I LOVE LUCY 7 THREE'S COMPANY 6 FRIENDS 5

X X X X X **Laundromat** **8**

CEREAL 32 SANDWICH 30 PIZZA 9 EGGS 8 MAC & CHEESE 7

X X X X X **Supermarket** **16**

SUPERMAN 47 SUPERMARKET 9 SUPER BOWL 9 SUPERINTENDENT 6 SUPER GLUE 6 SUPERSIZE 5

X X X X X **Church** **19**

DRINK 31 EAT 29 PICK UP WOMEN 11 SING 6 MAKE FOOL OF SELF 5 ARGUE/FIGHT 4

X X X X X **Club** **22**

QUES #1 NAME AN OCCUPATION IN WHICH YOU'D BE VERY EMBARRASSED TO GET A TRAFFIC TICKET. MC SIDE

QUES #2 NAME SOMETHING CHICAGO IS FAMOUS FOR.

X	X	X	X	X	Police Man	49
X	X	X	X	X	Chicago Fire	19
X	X	X	X	X	Truck Driver	10
X	X	X	X	X	"The Windy City"	18
X	X	X	X	X	Bus Driver	9
X	X	X	X	X	Sears Tower	13
X	X	X	X	X	Clown	5
X	X	X	X	X	The Bulls/Jordan	11
X	X	X	X	X	Judge	5
X	X	X	X	X	X X X X X	

▼ *FOLD LINE* ▼

GAME 22

X	X	X	X	X	X X X X X	
X	X	X	X	X	Judge	5
X	X	X	X	X	The Bulls/Jordan	11
X	X	X	X	X	Clown	5
X	X	X	X	X	Sears Tower	13
X	X	X	X	X	Bus Driver	9
X	X	X	X	X	"The Windy City"	18
X	X	X	X	X	Truck Driver	10
X	X	X	X	X	Chicago Fire	19
X	X	X	X	X	Police Man	49

QUES #3 NAME A FAMOUS MASKED MAN.

FAST MONEY QUESTIONS **MC SIDE**

FM 1 NAME A COMMAND YOU'D HAVE AN EASIER TIME GETTING YOUR DOG TO OBEY THAN YOUR CHILD.
FM 2 PAST OR PRESENT, NAME SOMEONE WHO MADE PEOPLE BELIEVE ANYTHING WAS POSSIBLE.
FM 3 NAME A HOLLYWOOD CELEBRITY YOU'D HATE YOUR DAUGHTER TO BE BEST FRIENDS WITH.
FM 4 IF YOU WERE A WITCH, NAME SOMEONE IN YOUR LIFE YOU'D CONSIDER TURNING INTO A TOAD.
FM 5 OTHER THAN MONEY, NAME SOMETHING PEOPLE TRY TO SAVE.

X X X X X **Zorro** **33**

SIT 56 STAY 19 LIE DOWN 5 STOP 4 COME HERE 4 QUIET 4

X X X X X **Batman** **24**

JESUS/GOD 13 MARTIN LUTHER KING, JR. 11 J.F.K. 11 LANCE ARMSTRONG 5 HARRY HOUDINI 5

X X X X X **Lone Ranger** **21**

PARIS HILTON 67 LINDSAY LOHAN 11 BRITNEY SPEARS 4 NICOLE RICHIE 2 ROSIE O'DONNELL 2

X X X X X **Spider-man** **7**

SPOUSE/MATE 15 SIBLING 15 FRIEND 12 BOSS/COWORKER 12 PARENT 7 MY EX 7

X X X X X **The Mask** **5**

PICTURES 14 TIME 12 HEALTH/LIVES 9 STAMPS 6 COUPONS 5 RELATIONSHIPS 5

▼ *FOLD LINE* ▼

X X X X X **Zorro** **33**

SIT 56 STAY 19 LIE DOWN 5 STOP 4 COME HERE 4 QUIET 4

X X X X X **Batman** **24**

JESUS/GOD 13 MARTIN LUTHER KING, JR. 11 J.F.K. 11 LANCE ARMSTRONG 5 HARRY HOUDINI 5

X X X X X **Lone Ranger** **21**

PARIS HILTON 67 LINDSAY LOHAN 11 BRITNEY SPEARS 4 NICOLE RICHIE 2 ROSIE O'DONNELL 2

X X X X X **Spider-man** **7**

SPOUSE/MATE 15 SIBLING 15 FRIEND 12 BOSS/COWORKER 12 PARENT 7 MY EX 7

X X X X X **The Mask** **5**

PICTURES 14 TIME 12 HEALTH/LIVES 9 STAMPS 6 COUPONS 5 RELATIONSHIPS 5

QUES #1 NAME A TV PROGRAM YOU'D LOVE TO WATCH IF IT DIDN'T COME ON SO LATE.

MC SIDE

QUES #2 NAME AN OCCASION OR EVENT AFTER WHICH YOU MIGHT BE BROKE.

Simpsons				**4**	**Charlie Rose**	**14**
X	X	X	X	X	**Wedding**	**38**
X	X	X	X	X	**Tonight Show**	**12**
X	X	X	X	X	**Vacation/Vegas**	**23**
X	X	X	X	X	**Late Show**	**11**
X	X	X	X	X	**Christmas**	**11**
X	X	X	X	X	**Late Night**	**8**
X	X	X	X	X	**Shopping**	**5**
X	X	X	X	X	**Saturday Night Live**	**4**
X	X	X	X	X	**Birthday Party**	**5**

▼ *FOLD LINE* ▼

GAME 23

X	X	X	X	X	**5**	**Birthday Party**
X	X	X	X	X	**4**	**Saturday Night Live**
X	X	X	X	X	**5**	**Shopping**
X	X	X	X	X	**8**	**Late Night**
X	X	X	X	X	**11**	**Christmas**
X	X	X	X	X	**11**	**Late Show**
X	X	X	X	X	**23**	**Vacation/Vegas**
X	X	X	X	X	**12**	**Tonight Show**
X	X	X	X	X	**38**	**Wedding**
4			**Simpsons**		**14**	**Charlie Rose**

QUES #3 NAME ONE THING YOU DREAD ABOUT GOING TO THE DOCTOR.

FAST MONEY QUESTIONS **MC SIDE**

FM 1 NAME A REASON WE MORTALS IDOLIZE CELEBRITIES.
FM 2 PAST OR PRESENT, NAME A POPULAR CHRISTMAS MOVIE.
FM 3 NAME SOMETHING A PERSON MIGHT REEK OF.
FM 4 IF MONEY WERE NO OBJECT, WHAT WOULD YOU BE DRIVING?
FM 5 NAME AN EXPRESSION THAT CONTAINS THE WORD "FOOT."

The Bill 5

THEIR MONEY 27 WANT TO BE THEM 14FAME AND FORTUNE 12

Undressing 5

IT'S A WONDERFUL LIFE 16 MIRACLE ON 34TH ST. 16 A CHRISTMAS CAROL 15

X X X X X

SMOKE/CIGARETTES 30 ALCOHOL 30 BODY ODOR 18

X X X X X

JAGUAR 8 BMW 8 LEXUS 8

X X X X X

FOOT IN MOUTH 38 FOOTLOOSE 13

The Wait 31

JEALOUSY/ENVY 11 DREAMS/FANTASY 7 WE'RE IDIOTS 7

The Shots 23

WHITE CHRISTMAS 10 A CHRISTMAS STORY 10 HOME ALONE 6

Results/Bad News 19

COLOGNE/PERFUME 11 GARLIC 5

The Exam 11

MERCEDES 8 MUSTANG/COBRA 8 PORSCHE 8

The Smell 5

FOOTBALL 7 BIGFOOT 4 ATHLETE'S FOOT 3

▼ *FOLD LINE* ▼

The Bill 5

THEIR MONEY 27 WANT TO BE THEM 14FAME AND FORTUNE 12

Undressing 5

IT'S A WONDERFUL LIFE 16 MIRACLE ON 34TH ST. 16 A CHRISTMAS CAROL 15

X X X X X

SMOKE/CIGARETTES 30 ALCOHOL 30 BODY ODOR 18

X X X X X

JAGUAR 8 BMW 8 LEXUS 8

X X X X X

FOOT IN MOUTH 38 FOOTLOOSE 13

The Wait 31

JEALOUSY/ENVY 11 DREAMS/FANTASY 7 WE'RE IDIOTS 7

The Shots 23

WHITE CHRISTMAS 10 A CHRISTMAS STORY 10 HOME ALONE 6

Results/Bad News 19

COLOGNE/PERFUME 11 GARLIC 5

The Exam 11

MERCEDES 8 MUSTANG/COBRA 8 PORSCHE 8

The Smell 5

FOOTBALL 7 BIGFOOT 4 ATHLETE'S FOOT 3

QUES #1 TELL ME SOMETHING "OLD MACDONALD" HAD ON HIS FARM.

MC SIDE

QUES #2 NAME SOMETHING THAT GETS VERY FRAGILE WHEN OLD.

X	X	X	X	X	**Pig**	**30**
Flowers				**2**	**People**	**52**
X	X	X	X	X	**Cow**	**27**
X	X	X	X	X	**Paper**	**25**
X	X	X	X	X	**Chick**	**20**
X	X	X	X	X	**Books**	**5**
X	X	X	X	X	**Duck**	**14**
X	X	X	X	X	**Pictures**	**4**
X	X	X	X	X	X X X X X	
X	X	X	X	X	**Eggs**	**2**

▼ *FOLD LINE* ▼

GAME 24

X	X	X	X	X	**2**	**Eggs**
X	X	X	X	X	X X X X X	
X	X	X	X	X	**4**	**Pictures**
X	X	X	X	X	**14**	**Duck**
X	X	X	X	X	**5**	**Books**
X	X	X	X	X	**20**	**Chick**
X	X	X	X	X	**25**	**Paper**
X	X	X	X	X	**27**	**Cow**
2			**Flowers**		**52**	**People**
X	X	X	X	X	**30**	**Pig**

QUES #3 NAME SOMETHING THAT KEEPS TWO PEOPLE, WHO LOVE EACH OTHER, FROM GETTING MARRIED.

FAST MONEY QUESTIONS **MC SIDE**

FM 1 NAME SOMETHING YOU ENTER FEET FIRST.
FM 2 NAME AN ACTRESS WHO SEEMS TO GET SEXIER THE OLDER SHE GETS.
FM 3 SOME PEOPLE ARE "HORSE-FACED." NAME ANOTHER ANIMAL PEOPLE LOOK LIKE.
FM 4 NAME SOMETHING A NUDIST WOULDN'T WANT TO SIT ON.
FM 5 WHAT WOULD YOU DO IF YOUR SPOUSE PACKED ON 50 POUNDS?

Prenuptial 3

POOL 29 | SHOWER/BATH 15 | PANTS 10

X X X X X

DEMI MOORE 12 | JULIA ROBERTS 9 | ANGELINA JOLIE 9

X X X X X

PIGS 28 | DOGS 28 | DONKEYS 6

X X X X X

A CACTUS 22 | COLD/HOT CHAIR 21 | A HOT ROCK 10 | THE SAND 9

X X X X X

DEAL WITH IT 40 | PUT ON A DIET 23 | EXERCISE 8 | DIVORCE/LEAVE 8

Family Disagrees 39

SHOES 8 | OCEAN 4 | CAR 3

Money 24

JODIE FOSTER 7 | SOPHIA LOREN 7 | DIANE LANE 7

Already Married 10

MONKEYS 6 | APES 3 | COWS 3

Religion 10

A TACK 5 | A TREE STUMP 5 | BROKEN GLASS 3 | ICE 3

Lack Of Trust 3

TALK TO HER/HIM 6 | GO SHOPPING 3 | EAT MORE 3

▼ *FOLD LINE* ▼

Family Disagrees 39

POOL 29 | SHOWER/BATH 15 | PANTS 10

Money 24

DEMI MOORE 12 | JULIA ROBERTS 9 | ANGELINA JOLIE 9

Already Married 10

PIGS 28 | DOGS 28 | DONKEYS 6

Religion 10

A CACTUS 22 | COLD/HOT CHAIR 21 | A HOT ROCK 10 | THE SAND 9

Lack Of Trust 3

DEAL WITH IT 40 | PUT ON A DIET 23 | EXERCISE 8 | DIVORCE/LEAVE 8

Prenuptial 3

SHOES 8 | OCEAN 4 | CAR 3

JODIE FOSTER 7 | SOPHIA LOREN 7 | DIANE LANE 7

MONKEYS 6 | APES 3 | COWS 3

A TACK 5 | A TREE STUMP 5 | BROKEN GLASS 3 | ICE 3

TALK TO HER/HIM 6 | GO SHOPPING 3 | EAT MORE 3

QUES #1 NAME A FOOD YOU'D EXPECT TO FIND AT EVERY ROADSIDE RESTAURANT IN AMERICA. MC SIDE

QUES #2 NAME AN ANIMAL WHOSE LEGS ARE FREQUENTLY EATEN.

X	X	X	X	X	**Hamburgers**	**56**
X	X	X	X	X	**Chicken**	**55**
X	X	X	X	X	**French Fries**	**16**
X	X	X	X	X	**Frog**	**27**
X	X	X	X	X	**Hot Dogs**	**14**
X	X	X	X	X	**Pig**	**6**
X	X	X	X	X	**Chicken**	**5**
X	X	X	X	X	**Crabs**	**5**
X	X	X	X	X	X X X X X	
X	X	X	X	X	**Lobster**	**2**

▼ *FOLD LINE* ▼

GAME 25

X	X	X	X	X	**Lobster**	**2**
X	X	X	X	X	X X X X X	
X	X	X	X	X	**Crabs**	**5**
X	X	X	X	X	**Chicken**	**5**
X	X	X	X	X	**Pig**	**6**
X	X	X	X	X	**Hot Dogs**	**14**
X	X	X	X	X	**Frog**	**27**
X	X	X	X	X	**French Fries**	**16**
X	X	X	X	X	**Chicken**	**55**
X	X	X	X	X	**Hamburgers**	**56**

QUES #3 IF YOU COULD CHANGE ANYTHING ABOUT YOUR JOB, WHAT WOULD IT BE?

FAST MONEY QUESTIONS **MC SIDE**

FM 1 NAME THE ONLY THING YOU NEED TO MAKE YOUR DOG HAPPY.
FM 2 NAME A POP STAR WHO IS NO LONGER A TOP STAR.
FM 3 WOMEN CAN SPEND ALL DAY SHOPPING. WHAT CAN MEN SPEND ALL DAY DOING?
FM 4 NAME A FAMOUS "JACK."
FM 5 NAME A FAMOUS "DAVID."

X X X X X **Better Pay 45**

LOVE/AFFECTION 41 FOOD/WATER 25 TREATS 21 PLAY TIME 8 DOG OPPOSITE SEX 2

X X X X X **Better Position 15**

MICHAEL JACKSON 34 BRITNEY SPEARS 30 PRINCE 3 BOY GEORGE 2 FRANKIE VALLI 2 ELVIS PRESLEY 2

X X X X X **Better Hours 13**

WATCHING SPORTS 46 WATCHING TV 16 FISHING 8 DRINKING/BEER 6 PLAYING VIDEO GAMES 5 GOLF/PLAYING SPORTS 5

X X X X X **Better Boss 9**

JACK NICHOLSON 72 JACK LEMMON 8 JACK PALANCE 6 JACK BLACK 5 JACK KLUGMAN 5 JACK BENNY 3

X X X X X **Better Location 6**

KING/& GOLIATH 40 DAVID LETTERMAN 11 DAVID COPPERFIELD 7 DAVID NIVEN 6 DAVID HASSELHOFF 6 DAVID CHAPPELLE 6

▼ *FOLD LINE* ▼

X X X X X **Better Pay 45**

LOVE/AFFECTION 41 FOOD/WATER 25 TREATS 21 PLAY TIME 8 DOG OPPOSITE SEX 2

X X X X X **Better Position 15**

MICHAEL JACKSON 34 BRITNEY SPEARS 30 PRINCE 3 BOY GEORGE 2 FRANKIE VALLI 2 ELVIS PRESLEY 2

X X X X X **Better Hours 13**

WATCHING SPORTS 46 WATCHING TV 16 FISHING 8 DRINKING/BEER 6 PLAYING VIDEO GAMES 5 GOLF/PLAYING SPORTS 5

X X X X X **Better Boss 9**

JACK NICHOLSON 72 JACK LEMMON 8 JACK PALANCE 6 JACK BLACK 5 JACK KLUGMAN 5 JACK BENNY 3

X X X X X **Better Location 6**

KING/& GOLIATH 40 DAVID LETTERMAN 11 DAVID COPPERFIELD 7 DAVID NIVEN 6 DAVID HASSELHOFF 6 DAVID CHAPPELLE 6

QUES #1 NAME SOMETHING BESIDES YOURSELF, THAT YOU WASH.

MC SIDE

QUES #2 NAME SOMETHING THAT TEXAS IS FAMOUS FOR.

X	X	X	X	X	**Clothes/Laundry**	**50**
X	X	X	X	X	**Food**	**22**
X	X	X	X	X	**Car**	**19**
X	X	X	X	X	**Longhorn Cattle**	**19**
X	X	X	X	X	**Dishes**	**17**
X	X	X	X	X	**Cowboys/Hats**	**16**
X	X	X	X	X	**Kids**	**7**
X	X	X	X	X	**Oil**	**10**
X	X	X	X	X	**Pets**	**6**
X	X	X	X	X	**Saloons**	**5**

▼ *FOLD LINE* ▼

GAME 26

X	X	X	X	X	**5**	**Saloons**
X	X	X	X	X	**6**	**Pets**
X	X	X	X	X	**10**	**Oil**
X	X	X	X	X	**7**	**Kids**
X	X	X	X	X	**16**	**Cowboys/Hats**
X	X	X	X	X	**17**	**Dishes**
X	X	X	X	X	**19**	**Longhorn Cattle**
X	X	X	X	X	**19**	**Car**
X	X	X	X	X	**22**	**Food**
X	X	X	X	X	**50**	**Clothes/Laundry**

QUES #3 NAME SOMETHING YOU WISH YOU HAD BEEN BORN WITH MORE OF.

FAST MONEY QUESTIONS **MC SIDE**

FM 1 NAME A QUESTION PEOPLE ASK THEIR DOGS.
FM 2 NAME YOUR FAVORITE ALFRED HITCHCOCK THRILLER.
FM 3 NAME SOMEONE FROM THE BIBLE WHOSE NAME BEGINS WITH THE LETTER "M."
FM 4 GIVE ME A PHRASE CONTAINING THE WORD "HOT."
FM 5 TELL ME AN OCCUPATION YOU FEEL IS BETTER DONE BY A WOMAN.

Family 4

WANNA EAT/TREAT? 37 | WANNA GO OUT? 24 | HOW ARE YOU? 9

X X X X X

THE BIRDS 48 | PSYCHO 29 | REAR WINDOW 15

X X X X X

MOSES 45 | MATTHEW 20 | MARK 10

X X X X X

HOT TAMALE 14 | HOT OUTSIDE/WEATHER 14 | HOT DOG 9

X X X X X

NURSE 14 | HOUSEKEEPING 12 | TEACHER 10

Money 59

WHAT DO YOU WANT? 5

Brains 11

VERTIGO 4 | NORTH BY NORTHWEST 3

Hair 10

MARY 9 | MALACHI 6

Good Looks 7

SOME LIKE IT HOT 8 | SHE/HE'S HOT 7 | HOT SAUCE 6

Height 5

MOTHER 9 | SECRETARY/RECEPTIONIST 6

▼ *FOLD LINE* ▼

Money 59

WANNA EAT/TREAT? 37 | WANNA GO OUT? 24 | HOW ARE YOU? 9

Brains 11

THE BIRDS 48 | PSYCHO 29 | REAR WINDOW 15

Hair 10

MOSES 45 | MATTHEW 20 | MARK 10

Good Looks 7

HOT TAMALE 14 | HOT OUTSIDE/WEATHER 14 | HOT DOG 9

Height 5

NURSE 14 | HOUSEKEEPING 12 | TEACHER 10

Family 4

WHAT DO YOU WANT? 5

VERTIGO 4 | NORTH BY NORTHWEST 3

MARY 9 | MALACHI 6

SOME LIKE IT HOT 8 | SHE/HE'S HOT 7 | HOT SAUCE 6

MOTHER 9 | SECRETARY/RECEPTIONIST 6

QUES #1 NAME A WEAPON THAT YOU WOULD USE TO SCARE OFF A BURGLAR. **MC SIDE**

QUES #2 FACT OR FICTION, NAME SOMEONE FAMOUS CALLED "MOTHER".

X	X	X	X	X	**Gun**	**73**
X	X	X	X	X	**Mother Goose**	**37**
X	X	X	X	X	**Baseball Bat**	**12**
X	X	X	X	X	**Mother Theresa**	**36**
X	X	X	X	X	**Knife**	**4**
X	X	X	X	X	**Mother Love**	**9**
X	X	X	X	X	**Shoe**	**4**
X	X	X	X	X	**Mother Hubbard**	**8**
X	X	X	X	X	**Pepper Spray/Mace**	**3**
X	X	X	X	X	**Mother Nature**	**4**

▼ *FOLD LINE* ▼

GAME 27

X	X	X	X	X	**Mother Nature**	**4**
X	X	X	X	X	**Pepper Spray/Mace**	**3**
X	X	X	X	X	**Mother Hubbard**	**8**
X	X	X	X	X	**Shoe**	**4**
X	X	X	X	X	**Mother Love**	**9**
X	X	X	X	X	**Knife**	**4**
X	X	X	X	X	**Mother Theresa**	**36**
X	X	X	X	X	**Baseball Bat**	**12**
X	X	X	X	X	**Mother Goose**	**37**
X	X	X	X	X	**Gun**	**73**

QUES #3 NAME SOMETHING SPECIFIC YOU'D HATE TO HAVE BEHIND YOU ON A HIGHWAY.

FAST MONEY QUESTIONS **MC SIDE**

FM 1 NAME AN OCCUPATION TO STAY AWAY FROM IF YOU HAVE A SHORT TEMPER.
FM 2 NAME SOMETHING EVERYONE KNOWS ABOUT PIGS.
FM 3 NAME A KIND OF CAR DRIVEN BY MEN WHO HAVE SOMETHING TO PROVE.
FM 4 PAST OR PRESENT, NAME A SINGER WHO'S THE KING OF COOL.
FM 5 NAME SOMETHING CALIFORNIA HAS MORE OF THAN NEW YORK HAS.

X X X X X **Big Truck 32**

POLICE 21 TEACHER 19 CUSTOMER SERVICE 11 NURSE/DOCTOR 8 WAITRESS 6 SALES 5

X X X X X **Police 31**

DIRTY/LIKE MUD 38 FAT/EAT A LOT 16 CURLY TAILS 8 BACON/HAM 8 OINK 7

X X X X X **Trailers 21**

CADILLAC 16 CORVETTE 15 FERRARI 10 BMW 8 HUMMER 9

X X X X X **Bad Driver/Tailgate 8**

ELVIS PRESLEY 39 MICHAEL JACKSON 18 FRANK SINATRA 12 BONO 5 JUSTIN TIMBERLAKE 5

X X X X X X X X X X

PEOPLE/STARS 40 EARTHQUAKES 20 SUNSHINE/TANS 9 BEACHES/COASTLINE 8 CARS 5

▼ *FOLD LINE* ▼

PEOPLE/STARS 40 EARTHQUAKES 20 SUNSHINE/TANS 9 BEACHES/COASTLINE 8 CARS 5

X X X X X X X X X X

ELVIS PRESLEY 39 MICHAEL JACKSON 18 FRANK SINATRA 12 BONO 5 JUSTIN TIMBERLAKE 5

X X X X X **Bad Driver/Tailgate 8**

CADILLAC 16 CORVETTE 15 FERRARI 10 BMW 8 HUMMER 9

X X X X X **Trailers 21**

DIRTY/LIKE MUD 38 FAT/EAT A LOT 16 CURLY TAILS 8 BACON/HAM 8 OINK 7

X X X X X **Police 31**

POLICE 21 TEACHER 19 CUSTOMER SERVICE 11 NURSE/DOCTOR 8 WAITRESS 6 SALES 5

X X X X X **Big Truck 32**

QUES #1 TELL ME SOMETHING POLICE LOOK FOR AS EVIDENCE, AT THE SCENE OF A CRIME. MC SIDE

QUES #2 NAME SOMETHING THAT PEOPLE SMOKE ON SPECIAL OCCASIONS.

X	X	X	X	X	**Fingerprints**	**54**
X	X	X	X	X	**Cigars**	**65**
X	X	X	X	X	**Blood/DNA**	**15**
X	X	X	X	X	**Doobie**	**19**
X	X	X	X	X	**Murder Weapon**	**13**
X	X	X	X	X	**Cigarette**	**7**
X	X	X	X	X	**Bullet Shells**	**6**
X	X	X	X	X	**Pipe**	**6**
X	X	X	X	X	**Drugs**	**6**
X	X	X	X	X	**Turkey**	**3**

▼ *FOLD LINE* ▼

GAME 28

X	X	X	X	X	**Turkey**	**3**
X	X	X	X	X	**Drugs**	**6**
X	X	X	X	X	**Pipe**	**6**
X	X	X	X	X	**Bullet Shells**	**6**
X	X	X	X	X	**Cigarette**	**7**
X	X	X	X	X	**Murder Weapon**	**13**
X	X	X	X	X	**Doobie**	**19**
X	X	X	X	X	**Blood/DNA**	**15**
X	X	X	X	X	**Cigars**	**65**
X	X	X	X	X	**Fingerprints**	**54**

QUES #3 NAME SOMETHING THAT MEN COMPETE WITH EACH OTHER TO GET.

FAST MONEY QUESTIONS **MC SIDE**

FM 1 NAME A UNIVERSITY FAMOUS FOR ITS GREAT FOOTBALL TEAM.
FM 2 WHO DO YOU THINK IS THE MOST INTERESTING MAN ALIVE?
FM 3 NAME SOMETHING A WOMAN MIGHT STOP WEARING AFTER SHE GETS MARRIED.
FM 4 NAME A PLACE YOU SHOULD AVOID IF YOU DON'T LIKE SCREAMING KIDS.
FM 5 NAME A WORD OR PHRASE THAT MEANS THE SAME AS "LOST YOUR JOB."

Sports 3

NOTRE DAME 42	PENN STATE 8	USC 7
X	X	X

BARACK OBAMA 25	BILL CLINTON 12	MY HUSBAND 10
X	X	X

MAKEUP 19	BRA/LINGERIE 15	MINI/SHORT SKIRTS 10
X	X	X

FAMILY RESTAURANT 38	PARK/PLAYGROUND 15	AMUSEMENT PARK 15
X	X	X

FIRED 37	CANNED 27	UNEMPLOYED 8

Women 63

FLORIDA 6	OHIO STATE 5	UCLA 4

Jobs/More Money 19

GEORGE CLOONEY 9	DALAI LAMA 3	STEPHEN HAWKING 3

Attention 5

NIGHTGOWN/PJ'S 8	RING 8	DRESSES 7

Trophy/Medal 5

DAYCARE/NURSERY 7	MOVIE THEATER 5	SCHOOL/KINDERGARTEN 4

Cars 4

PINK-SLIPPED 7	LAID OFF 7	DOWNSIZED 4

▼ *FOLD LINE* ▼

Women 63

NOTRE DAME 42 PENN STATE 8 USC 7

Jobs/More Money 19

BARACK OBAMA 25 BILL CLINTON 12 MY HUSBAND 10

Attention 5

MAKEUP 19 BRA/LINGERIE 15 MINI/SHORT SKIRTS 10

Trophy/Medal 5

FAMILY RESTAURANT 38 PARK/PLAYGROUND 15 AMUSEMENT PARK 15

Cars 4

FIRED 37 CANNED 27 UNEMPLOYED 8

Sports 3

FLORIDA 6 OHIO STATE 5 UCLA 4

GEORGE CLOONEY 9 DALAI LAMA 3 STEPHEN HAWKING 3

NIGHTGOWN/PJ'S 8 RING 8 DRESSES 7

DAYCARE/NURSERY 7 MOVIE THEATER 5 SCHOOL/KINDERGARTEN 4

PINK-SLIPPED 7 LAID OFF 7 DOWNSIZED 4

QUES #1 IF YOU COULD HAVE A SOUVENIR FROM THE MOVIE, "THE WIZARD OF OZ," WHAT WOULD YOU LIKE TO HAVE?

QUES #2 NAME A FAMOUS PERSON NAMED CAROL.

MC SIDE

X	X	X	X	X	**Ruby Slippers**	**61**
X	X	X	X	X	**Carol Burnett**	**78**
X	X	X	X	X	**Tin Man Outfit**	**13**
X	X	X	X	X	**Carroll O'Connor**	**11**
X	X	X	X	X	**Toto**	**8**
X	X	X	X	X	**Carol Channing**	**4**
X	X	X	X	X	**Lion Outfit**	**6**
X	X	X	X	X	**Carole King**	**2**
X	X	X	X	X	**Scarecrow**	**5**
X	X	X	X	X	**Carole Lombard**	**2**

▼ *FOLD LINE* ▼

GAME 29

X	X	X	X	X	**Carole Lombard**	**2**
X	X	X	X	X	**Scarecrow**	**5**
X	X	X	X	X	**Carole King**	**2**
X	X	X	X	X	**Lion Outfit**	**6**
X	X	X	X	X	**Carol Channing**	**4**
X	X	X	X	X	**Toto**	**8**
X	X	X	X	X	**Carroll O'Connor**	**11**
X	X	X	X	X	**Tin Man Outfit**	**13**
X	X	X	X	X	**Carol Burnett**	**78**
X	X	X	X	X	**Ruby Slippers**	**61**

QUES #3 NAME A PHRASE OR EXPRESSION THAT BEGINS WITH "BETTER..."

FAST MONEY QUESTIONS **MC SIDE**

FM 1 NAME SOMETHING THAT WOMEN CAN'T KEEP FOR VERY LONG.
FM 2 NAME SOMETHING THAT MIGHT BE FLOATING AROUND THE ROOM AT A SÉANCE.
FM 3 NAME AN ANIMAL YOUR MATE SOUNDS LIKE WHEN HE OR SHE SNORES.
FM 4 NAME SOMETHING PEOPLE ARE BORN WITH A TALENT FOR.
FM 5 NAME SOMETHING THAT YOU SEE ON THE COVER OF A CHRISTMAS CARD.

X X X X X **...Late Than Never 21**

MONEY 25 | A SECRET 24 | MATE/SPOUSE 13 | CHOCOLATE 7 | SHOES/HIGH HEELS 5 | QUIET 4

X X X X X **...Luck Next Time 15**

GHOSTS/SPIRITS 35 | SMOKE/MIST 19 | CANDLES 11 | TABLES/CHAIRS 7 | LAMPS/LIGHTS 5 | THOUGHTS/QUESTIONS 4

X X X X X **...Safe Than Sorry 19**

PIG/BOAR 27 | BEAR 21 | HORSE 9 | RHINOCEROS 8 | COW 4 | CAT 4

X X X X X **...Off Dead 6**

SINGING/MUSIC 75 | PAINTING/DRAWING 8 | TALKING/SPEAKING 5 | ATHLETIC ABILITY 4 | DANCING 3

X X X X X **...You Than Me 4**

CHRISTMAS TREE 43 | SANTA CLAUS 27 | XMAS GREETING 9 | SNOW/SNOWMAN 6 | ANGELS 4 | NATIVITY/JESUS 4

▼ *FOLD LINE* ▼

X X X X X **...Late Than Never 21**

MONEY 25 | A SECRET 24 | MATE/SPOUSE 13 | CHOCOLATE 7 | SHOES/HIGH HEELS 5 | QUIET 4

X X X X X **...Luck Next Time 15**

GHOSTS/SPIRITS 35 | SMOKE/MIST 19 | CANDLES 11 | TABLES/CHAIRS 7 | LAMPS/LIGHTS 5 | THOUGHTS/QUESTIONS 4

X X X X X **...Safe Than Sorry 19**

PIG/BOAR 27 | BEAR 21 | HORSE 9 | RHINOCEROS 8 | COW 4 | CAT 4

X X X X X **...Off Dead 6**

SINGING/MUSIC 75 | PAINTING/DRAWING 8 | TALKING/SPEAKING 5 | ATHLETIC ABILITY 4 | DANCING 3

X X X X X **...You Than Me 4**

CHRISTMAS TREE 43 | SANTA CLAUS 27 | XMAS GREETING 9 | SNOW/SNOWMAN 6 | ANGELS 4 | NATIVITY/JESUS 4

QUES #1 NAME SOMETHING PEOPLE PUT ON WHEN THEY GET READY FOR BED.

QUES #2 NAME A WORD THAT RHYMES WITH "SMELLY."

MC SIDE

X	X	X	X	X	**Pajamas**	**71**
Kelly				**3**	**Belly**	**60**
X	X	X	X	X	**Night Gown**	**17**
Telly				**2**	**Jelly**	**19**
X	X	X	X	X	**Cream/Lotion**	**5**
X	X	X	X	X	**Nelly**	**8**
X	X	X	X	X	**TV**	**2**
X	X	X	X	X	**Shelly**	**5**
X	X	X	X	X	**Blanket**	**2**
X	X	X	X	X	**Deli**	**3**

▼ *FOLD LINE* ▼

GAME 30

X	X	X	X	X	**3**	**Deli**
X	X	X	X	X	**2**	**Blanket**
X	X	X	X	X	**5**	**Shelly**
X	X	X	X	X	**2**	**TV**
X	X	X	X	X	**8**	**Nelly**
X	X	X	X	X	**5**	**Cream/Lotion**
2			**Telly**		**19**	**Jelly**
X	X	X	X	X	**17**	**Night Gown**
3			**Kelly**		**60**	**Belly**
X	X	X	X	X	**71**	**Pajamas**

QUES #3 NAME SOMETHING THAT MIGHT BE A FOOT LONG.

FAST MONEY QUESTIONS **MC SIDE**

FM 1 WHICH MAJOR AMERICAN CITY DO YOU THINK HAS THE BEST POLICE DEPARTMENT?
FM 2 WE ASKED 100 MEN…NAME A CAR YOU'D TRADE YOUR MOTHER FOR.
FM 3 NAME A MOVIE KEVIN COSTNER STARRED IN.
FM 4 NAME SOMETHING THAT HAPPENS EVERY EASTER SUNDAY.
FM 5 NAME A FOOD YOU WOULD EAT EVEN IF YOU HAD NO TEETH.

Arms 2

NEW YORK 46 | LOST ANGELES 16 | DALLAS 5 | SEATTLE 4 | CHICAGO 4 | SAN FRANCISCO 3

Snake 2

CORVETTE 18 | FERRARI 16 | PORSCHE 14 | LAMBORGHINI 14 | ROLLS-ROYCE 12 | BMW 7

X X X X X

Sandwich 21

DANCES WITH WOLVES 50 | WATERWORLD 16 | THE BODYGUARD 10 | FIELD OF DREAMS 8 | TIN CUP 4 | THE GUARDIAN 2

X X X X X

Feet 9

CHURCH/SERVICE 60 | EGG HUNT 15 | BUNNY/BASKETS 10 | DECORATE EGGS 5 | FAMILY DINNER 5

X X X X X

Shoes 2

ICE CREAM 18 | PUDDING 9 | STEAK 9 | SOUP 7 | OATMEAL/CEREAL 7

Hot Dog 35

NEW YORK 46 | LOST ANGELES 16 | DALLAS 5 | SEATTLE 4 | CHICAGO 4 | SAN FRANCISCO 3

Ruler 31

CORVETTE 18 | FERRARI 16 | PORSCHE 14 | LAMBORGHINI 14 | ROLLS-ROYCE 12 | BMW 7

X X X X X

Sandwich 21

DANCES WITH WOLVES 50 | WATERWORLD 16 | THE BODYGUARD 10 | FIELD OF DREAMS 8 | TIN CUP 4 | THE GUARDIAN 2

X X X X X

Feet 9

CHURCH/SERVICE 60 | EGG HUNT 15 | BUNNY/BASKETS 10 | DECORATE EGGS 5 | FAMILY DINNER 5

X X X X X

Shoes 2

ICE CREAM 18 | PUDDING 9 | STEAK 9 | SOUP 7 | OATMEAL/CEREAL 7

Hot Dog 35

NEW YORK 46 | LOST ANGELES 16 | DALLAS 5 | SEATTLE 4 | CHICAGO 4 | SAN FRANCISCO 3

Ruler 31

CORVETTE 18 | FERRARI 16 | PORSCHE 14 | LAMBORGHINI 14 | ROLLS-ROYCE 12 | BMW 7

X X X X X

Sandwich 21

DANCES WITH WOLVES 50 | WATERWORLD 16 | THE BODYGUARD 10 | FIELD OF DREAMS 8 | TIN CUP 4 | THE GUARDIAN 2

X X X X X

Feet 9

CHURCH/SERVICE 60 | EGG HUNT 15 | BUNNY/BASKETS 10 | DECORATE EGGS 5 | FAMILY DINNER 5

X X X X X

Shoes 2

ICE CREAM 18 | PUDDING 9 | STEAK 9 | SOUP 7 | OATMEAL/CEREAL 7

Arms 2

NEW YORK 46 | LOST ANGELES 16 | DALLAS 5 | SEATTLE 4 | CHICAGO 4 | SAN FRANCISCO 3

Snake 2

CORVETTE 18 | FERRARI 16 | PORSCHE 14 | LAMBORGHINI 14 | ROLLS-ROYCE 12 | BMW 7

X X X X X

Sandwich 21

DANCES WITH WOLVES 50 | WATERWORLD 16 | THE BODYGUARD 10 | FIELD OF DREAMS 8 | TIN CUP 4 | THE GUARDIAN 2

X X X X X

Feet 9

CHURCH/SERVICE 60 | EGG HUNT 15 | BUNNY/BASKETS 10 | DECORATE EGGS 5 | FAMILY DINNER 5

X X X X X

Shoes 2

ICE CREAM 18 | PUDDING 9 | STEAK 9 | SOUP 7 | OATMEAL/CEREAL 7

▼ *FOLD LINE* ▼

QUES #1 WHICH COUNTRY IS THE COSMETIC SURGERY CAPITOL OF THE WORLD? **MC SIDE**

QUES #2 NAME A PLACE YOU WOULDN'T WANT THE PERSON WAITING ON YOU TO SNEEZE.

X	X	X	X	X	**United States**	**72**
X	X	X	X	X	**A Restaurant**	**56**
X	X	X	X	X	**France**	**16**
X	X	X	X	X	**Dentist Office**	**6**
X	X	X	X	X	**Brazil**	**4**
X	X	X	X	X	**Doctor's Office**	**5**
X	X	X	X	X	**Sweden**	**3**
X	X	X	X	X	**A Hospital**	**4**
X	X	X	X	X	**Switzerland**	**2**
X	X	X	X	X	**An Elevator**	**2**

▼ *FOLD LINE* ▼

GAME 31

X	X	X	X	X	**2**	**An Elevator**
X	X	X	X	X	**2**	**Switzerland**
X	X	X	X	X	**4**	**A Hospital**
X	X	X	X	X	**3**	**Sweden**
X	X	X	X	X	**5**	**Doctor's Office**
X	X	X	X	X	**4**	**Brazil**
X	X	X	X	X	**6**	**Dentist Office**
X	X	X	X	X	**16**	**France**
X	X	X	X	X	**56**	**A Restaurant**
X	X	X	X	X	**72**	**United States**

QUES #3 NAME A PART OF A BODYBUILDER THAT'S HUGE.

FAST MONEY QUESTIONS **MC SIDE**

FM 1 NAME A TYPE OF "DROP."
FM 2 NAME A PAST OR PRESENT TV SHOW THAT PROVES MONEY DOES BUY HAPPINESS.
FM 3 NAME SOMEONE. PAST OR PRESENT, WHOSE FACELIFT COULD USE A FACELIFT.
FM 4 NAME SOMEONE FAMOUS WHO HAD A MELTDOWN ON TV.
FM 5 NAME A CELEBRITY, LIVING OR NOT, WHO'S GONE FINANCIALLY BUST.

Ego 3

EYE 36 RAIN 31 TEAR 11

X X X X X

WHO WANTS TO BE A MILLIONAIRE? 31 DEAL OR NO DEAL 25 PRICE IS RIGHT 8

X X X X X

JOAN RIVERS 39 MICHAEL JACKSON 16 PHYLLIS DILLER 7

X X X X X

ELLEN DEGENERES 36 BRITNEY SPEARS 15 ROSIE O'DONNELL 8

X X X X X

ED MCMAHON 42 MICHAEL JACKSON 17 MC HAMMER 16

Biceps/Forearms 55

COUGH 5 LEMON 5 NOSE 5

Chest 22

THE APPRENTICE 4 WHEEL OF FORTUNE 4 OPRAH 4

Thighs 7

KENNY ROGERS 5 BARBARA WALTERS 4 CHER 4

Neck 5

MICHAEL RICHARDS 7 TOM CRUISE 6 HEATHER MILLS 4

Shoulders 5

WILLIE NELSON 7 MIKE TYSON 5 O.J. SIMPSON 4

▼ *FOLD LINE* ▼

Biceps/Forearms 55

EYE 36 RAIN 31 TEAR 11

Chest 22

WHO WANTS TO BE A MILLIONAIRE? 31 DEAL OR NO DEAL 25 PRICE IS RIGHT 8

Thighs 7

JOAN RIVERS 39 MICHAEL JACKSON 16 PHYLLIS DILLER 7

Neck 5

ELLEN DEGENERES 36 BRITNEY SPEARS 15 ROSIE O'DONNELL 8

Shoulders 5

ED MCMAHON 42 MICHAEL JACKSON 17 MC HAMMER 16

Ego 3

COUGH 5 LEMON 5 NOSE 5

THE APPRENTICE 4 WHEEL OF FORTUNE 4 OPRAH 4

KENNY ROGERS 5 BARBARA WALTERS 4 CHER 4

MICHAEL RICHARDS 7 TOM CRUISE 6 HEATHER MILLS 4

WILLIE NELSON 7 MIKE TYSON 5 O.J. SIMPSON 4

QUES #1 NAME SOMETHING PEOPLE SAY THEY DON'T LIKE ABOUT THE PLACE THEY WORK.

MC SIDE

QUES #2 NAME A FEAR THAT PEOPLE EVENTUALLY OUTGROW.

X	X	X	X	X	**Boss/People**	**74**
X	X	X	X	X	**The Dark**	**53**
X	X	X	X	X	**Salary/Benefits**	**10**
X	X	X	X	X	**Heights/Flying**	**12**
X	X	X	X	X	**Hate Actual Work**	**9**
X	X	X	X	X	**Monsters**	**8**
X	X	X	X	X	**The Hours**	**3**
X	X	X	X	X	**Aging**	**5**
X	X	X	X	X	**Location/Commute**	**2**
X	X	X	X	X	**Claustrophobia**	**4**

▼ *FOLD LINE* ▼

GAME 32

X	X	X	X	X	**Claustrophobia**	**4**
X	X	X	X	X	**Location/Commute**	**2**
X	X	X	X	X	**Aging**	**5**
X	X	X	X	X	**The Hours**	**3**
X	X	X	X	X	**Monsters**	**8**
X	X	X	X	X	**Hate Actual Work**	**9**
X	X	X	X	X	**Heights/Flying**	**12**
X	X	X	X	X	**Salary/Benefits**	**10**
X	X	X	X	X	**The Dark**	**53**
X	X	X	X	X	**Boss/People**	**74**

QUES #3 NAME SOMETHING YOU DON'T WANT TO LEAVE IN YOUR CAR AT A CAR WASH.

FAST MONEY QUESTIONS **MC SIDE**

FM 1 NAME THE MOST COMMON REASON FOR A PERSON TO BE HOSPITALIZED.
FM 2 NAME A KIND OF CAR THAT EVERYONE WANTS THESE DAYS.
FM 3 NAME AN ATHLETE WHO IS RECOGNIZED AROUND THE WORLD.
FM 4 NAME A CELEBRITY, LIVING OR DEAD, WHO MAKES A DIFFERENCE IN THE WORLD.
FM 5 TELL ME WHAT YOU KNOW ABOUT "THE TERMINATOR."

X X X X X

ILLNESS/DISEASE 30 | HEART ATTACK 27 | BROKEN BONE 10

X X X X X

HYBRID/GAS SAVER 47 | PRIUS 12 | HUMMER 6

X X X X X

MICHAEL JORDAN 22 | TIGER WOODS 17 | MUHAMMAD ALI 10

X X X X X

OPRAH WINFREY 30 | ANGELINA JOLIE 17 | BONO 12

X X X X X

SCHWARZENEGGER 38 | HE'S A MACHINE 29 | HE'LL BE BACK! 8

Money/Wallet 54

SURGERY 9 | CAR ACCIDENT 7 | HAVING A BABY 6

Purse 17

MERCEDES-BENZ 5 | HONDA 5 | CORVETTE 4

Child 7

DAVID BECKHAM 8 | BABE RUTH 6 | BRETT FAVRE 6

Keys 5

MOTHER TERESA 6 | BILL GATES 3 | MEL GIBSON 3

Pet 3

IN GOVERNOR RACE 6 | IT'S A MOVIE 5

▼ *FOLD LINE* ▼

X X X X X

ILLNESS/DISEASE 30 | HEART ATTACK 27 | BROKEN BONE 10

X X X X X

HYBRID/GAS SAVER 47 | PRIUS 12 | HUMMER 6

X X X X X

MICHAEL JORDAN 22 | TIGER WOODS 17 | MUHAMMAD ALI 10

X X X X X

OPRAH WINFREY 30 | ANGELINA JOLIE 17 | BONO 12

X X X X X

SCHWARZENEGGER 38 | HE'S A MACHINE 29 | HE'LL BE BACK! 8

Money/Wallet 54

SURGERY 9 | CAR ACCIDENT 7 | HAVING A BABY 6

Purse 17

MERCEDES-BENZ 5 | HONDA 5 | CORVETTE 4

Child 7

DAVID BECKHAM 8 | BABE RUTH 6 | BRETT FAVRE 6

Keys 5

MOTHER TERESA 6 | BILL GATES 3 | MEL GIBSON 3

Pet 3

IN GOVERNOR RACE 6 | IT'S A MOVIE 5

QUES #1 TELL ME SOMETHING PEOPLE CAN DO TO STIMULATE THEIR MINDS.

MC SIDE

QUES #2 NAME A PLACE YOU MIGHT LEAVE A NOTE SO EVERYONE IN THE HOUSE WILL SEE IT.

X	X	X	X	X	**Read**	**75**
X	X	X	X	X	**Refrigerator**	**53**
X	X	X	X	X	**Do Puzzles**	**5**
X	X	X	X	X	**Kitchen Table/Counter**	**18**
X	X	X	X	X	**Exercise**	**5**
X	X	X	X	X	**TV**	**10**
X	X	X	X	X	**Meditate**	**3**
X	X	X	X	X	**Front Door**	**7**
X	X	X	X	X	**Sleep**	**3**
X	X	X	X	X	**On Phone**	**6**

▼ *FOLD LINE* ▼

X	X	X	X	X	**On Phone**	**6**
X	X	X	X	X	**Sleep**	**3**
X	X	X	X	X	**Front Door**	**7**
X	X	X	X	X	**Meditate**	**3**
X	X	X	X	X	**TV**	**10**
X	X	X	X	X	**Exercise**	**5**
X	X	X	X	X	**Kitchen Table/Counter**	**18**
X	X	X	X	X	**Do Puzzles**	**5**
X	X	X	X	X	**Refrigerator**	**53**
X	X	X	X	X	**Read**	**75**

QUES #3 NAME A KID'S FAVORITE FOOD THAT STARTS WITH THE LETTER "M."

FAST MONEY QUESTIONS **MC SIDE**

FM 1 NAME AN OCCUPATION WHOSE MEMBERS WORRY ABOUT BEING BITTEN.
FM 2 NAME SOMETHING PEOPLE CARRY IN ORDER TO MAKE THEMSELVES LOOK IMPORTANT.
FM 3 NAME AN OCCUPATION THAT ENDS WITH THE WORD "GUY."
FM 4 NAME A SPECIFIC PART OF A PERSON'S BODY THAT MIGHT BE DESCRIBED AS "WIDE."
FM 5 IF HE WASN'T AN ACTOR, WHAT JOB DO YOU THINK SYLVESTER STALLONE WOULD BE PERFECT FOR?

Mashed Potatoes 3

DOG CATCHER 18 | SNAKE HANDLER 18 | ZOOKEEPER 13

Mac and Cheese 60

VETERINARIAN 13 | MAIL CARRIER 11 | BEEKEEPER 7

Milky Way Bars 3

BRIEFCASE 63 | PHONE/EARPIECE 14 | MONEY 5

X X X X X

CABLE GUY 41 | WISE GUY 11 | POOL GUY 10

X X X X X

BOTTOM 62 | HIPS 23 | SHOULDERS 5

X X X X X

BOXER 51 | PHYSICAL FITNESS 11 | BOUNCER 5

M&Ms 11

LAPTOP/COMPUTER 5 | DESIGNER PURSE 3

Milk 10

PIZZA GUY 5 | DELIVERY GUY 4

Milkshakes 3

CHEST 2 | WAIST 2

Marshmallows 3

POLITICIAN 5 | MODEL 4 | POLICE OFFICER 4

▼ *FOLD LINE* ▼

Mashed Potatoes 3

DOG CATCHER 18 | SNAKE HANDLER 18 | ZOOKEEPER 13

Mac and Cheese 60

VETERINARIAN 13 | MAIL CARRIER 11 | BEEKEEPER 7

Milky Way Bars 3

BRIEFCASE 63 | PHONE/EARPIECE 14 | MONEY 5

X X X X X

CABLE GUY 41 | WISE GUY 11 | POOL GUY 10

X X X X X

BOTTOM 62 | HIPS 23 | SHOULDERS 5

X X X X X

BOXER 51 | PHYSICAL FITNESS 11 | BOUNCER 5

M&Ms 11

LAPTOP/COMPUTER 5 | DESIGNER PURSE 3

Milk 10

PIZZA GUY 5 | DELIVERY GUY 4

Milkshakes 3

CHEST 2 | WAIST 2

Marshmallows 3

POLITICIAN 5 | MODEL 4 | POLICE OFFICER 4

QUES #1 NAME A WOMAN'S OCCUPATION THAT MIGHT SCARE AWAY A POTENTIAL SUITOR. MC SIDE

QUES #2 NAME SOMETHING PEOPLE ASSOCIATE WITH FRED FLINTSTONE.

X	X	X	X	X	Police Officer	22
BAMM BAMM				4	YABBA DABBA DO!	24
X	X	X	X	X	Mortician	15
X	X	X	X	X	Barney Rubble	22
X	X	X	X	X	Lawyer/Attorney	12
X	X	X	X	X	Wilma	13
X	X	X	X	X	Boxer	4
X	X	X	X	X	Bedrock	12
X	X	X	X	X	CEO	4
X	X	X	X	X	Dinosaurs/Dino	11

▼ *FOLD LINE* ▼

GAME 34

X	X	X	X	X	Dinosaurs/Dino	11
X	X	X	X	X	CEO	4
X	X	X	X	X	Bedrock	12
X	X	X	X	X	Boxer	4
X	X	X	X	X	Wilma	13
X	X	X	X	X	Lawyer/Attorney	12
X	X	X	X	X	Barney Rubble	22
X	X	X	X	X	Mortician	15
BAMM BAMM				4	YABBA DABBA DO!	24
X	X	X	X	X	Police Officer	22

QUES #3 WHEN YOU NEED INFORMATION FAST, WHAT DO YOU DO?

FAST MONEY QUESTIONS **MC SIDE**

FM 1 WE ASKED 100 WOMEN…NAME SOMETHING WOMEN DO FOR THEIR LITTLE BOYS THAT THEY ALSO DO FOR THEIR HUSBANDS.
FM 2 IF MARTIANS LANDED LOOKING FOR THE HOTTEST BABE ON PLANET EARTH, WHOSE HOUSE SHOULD THEY VISIT?
FM 3 IF YOU COULD TALK TO THE ANIMALS, WHICH ONE WOULD YOU LIKE TO HAVE A CONVERSATION WITH?
FM 4 IF HIS HORSE WAS SICK, NAME SOMETHING ELSE A COWBOY MIGHT HAVE TO RIDE.
FM 5 WHICH STATE HAS THE FEWEST SMOKERS?

Fax It 2

COOK 26 | CLEAN UP AFTER 17 | LAUNDRY 15

X X X X X

MY HOUSE 10 | JESSICA ALBA'S 9 | PAM ANDERSON'S 9

X X X X X

DOG 39 | CAT 14 | BIRD 9

X X X X X

DONKEY/MULE 39 | CAR/TRUCK 15 | BULL 13

X X X X X

CALIFORNIA 16 | NEW JERSEY 14 | FLORIDA 6

Computer/Internet 57

KISS/HUG 10 | SHOP FOR THEM 8 | DRESS THEM 7

Ask Someone 18

PARIS HILTON'S 7 | ANGELINA JOLIE'S 7 | HUGH HEFNER'S 7

Dial 411 10

TIGER 6 | LION 5 | DOLPHIN/WHALE 4

Phone Book 9

COW 8 | ANOTHER HORSE 7 | TRACTOR 4

Dictionary 2

DELAWARE 5 | MAINE 5 | NEW YORK 5

▼ *FOLD LINE* ▼

CALIFORNIA 16 | NEW JERSEY 14 | FLORIDA 6 | DELAWARE 5 | MAINE 5 | NEW YORK 5

Dictionary 2

X X X X X

DONKEY/MULE 39 | CAR/TRUCK 15 | BULL 13 | COW 8 | ANOTHER HORSE 7 | TRACTOR 4

Phone Book 9

X X X X X

DOG 39 | CAT 14 | BIRD 9 | TIGER 6 | LION 5 | DOLPHIN/WHALE 4

Dial 411 10

X X X X X

MY HOUSE 10 | JESSICA ALBA'S 9 | PAM ANDERSON'S 9 | PARIS HILTON'S 7 | ANGELINA JOLIE'S 7 | HUGH HEFNER'S 7

Ask Someone 18

X X X X X

COOK 26 | CLEAN UP AFTER 17 | LAUNDRY 15 | KISS/HUG 10 | SHOP FOR THEM 8 | DRESS THEM 7

Computer/Internet 57

Fax It 2

QUES #1 NAME SOMETHING THAT BEGINS WITH "MARCH OF…"

MC SIDE

QUES #2 NAME SOMEPLACE YOU GO WHERE PEOPLE OFTEN SEEM TO BE IN A HURRY.

X X X X X

New York **8**

X X X X X

Work **5**

X X X X X

Downtown **4**

X X X X X

X X X X X

X X X X X

X X X X X

Dimes **83**

Airport **26**

The Penguins **4**

Bank **12**

The Wooden Soldiers **2**

Grocery Store **11**

Time **2**

Mall **9**

X X X X X X X X X X

Highway **9**

▼ *FOLD LINE* ▼

GAME 35

X X X X X

Highway **9**

X X X X X X X X X X

Mall **9**

X X X X X

Time **2**

X X X X X

Grocery Store **11**

Downtown **4**

X X X X X

The Wooden Soldiers **2**

X X X X X

Bank **12**

Work **5**

X X X X X

The Penguins **4**

Airport **26**

New York **8**

X X X X X

Dimes **83**

QUES #3 NAME SOMETHING A WOMAN MIGHT HIDE IN HER BRA.

FAST MONEY QUESTIONS **MC SIDE**

FM 1 NAME SOMETHING SOME PEOPLE SAY THEY DON'T REALLY NEED MUCH OF.
FM 2 NAME SOMETHING PEOPLE DO IN A GROUP.
FM 3 NAME SOMETHING IN THE MEDICINE CABINET THAT'S USED BY BOTH MEN AND WOMEN.
FM 4 NAME SOMETHING THAT PEOPLE ARE VERY LOYAL TO.
FM 5 WE ASKED 100 WOMEN…WHAT DO YOU HOPE THE PERFECT MAN SAYS TO YOU AT THE END OF A FIRST DATE?

X X X X X **Money** **82**

MONEY 38 SLEEP 14 FOOD/SWEETS 11 CLOTHING 5 TROUBLE 3 LOVE 3

X X X X X **Kleenex/Tissue** **4**

TALK/GOSSIP 19 SING 17 LAUGH/BE JOYFUL 8 EAT/BARBECUE 8 PLAY/WATCH SPORTS 8 PRAY 7

X X X X X **Love Note** **3**

OTC MEDICINE/ASPIRIN 54 TOOTHPASTE 20 BANDAGES/BAND-AIDS 5 DEODORANT 5 DENTAL FLOSS 4 LOTION 2

X X X X X **A Gun** **2**

FAMILY OR MATE 30 RELIGION/CHURCH 19 PET 13 FRIEND 9 SCHOOL 8 COUNTRY 6

X X X X X **Lighter** **2**

CALL YOU/SEE YOU? 57 HAD A GREAT TIME 17 I LIKE/LOVE YOU 5 MAY I KISS YOU 4 GOOD NIGHT/BYE 4

▼ *FOLD LINE* ▼

CALL YOU/SEE YOU? 57 HAD A GREAT TIME 17 I LIKE/LOVE YOU 5 MAY I KISS YOU 4 GOOD NIGHT/BYE 4

Lighter **2** X X X X X

FAMILY OR MATE 30 RELIGION/CHURCH 19 PET 13 FRIEND 9 SCHOOL 8 COUNTRY 6

A Gun **2** X X X X X

OTC MEDICINE/ASPIRIN 54 TOOTHPASTE 20 BANDAGES/BAND-AIDS 5 DEODORANT 5 DENTAL FLOSS 4 LOTION 2

Love Note **3** X X X X X

TALK/GOSSIP 19 SING 17 LAUGH/BE JOYFUL 8 EAT/BARBECUE 8 PLAY/WATCH SPORTS 8 PRAY 7

Kleenex/Tissue **4** X X X X X

MONEY 38 SLEEP 14 FOOD/SWEETS 11 CLOTHING 5 TROUBLE 3 LOVE 3

Money **82** X X X X X

QUES #1 WE ASKED 100 MARRIED MEN…NAME SOMETHING YOUR MOTHER USED TO FORCE YOU TO DO THAT NOW YOUR WIFE FORCES YOU TO DO.

MC SIDE

QUES #2 NAME SOMETHING YOU DO ON SUNDAY THAT MAKES IT A FUN DAY.

X	X	X	X	X	**Take Out Trash**	**28**
Time With Family					**Go To Church**	**24**
X	X	X	X	X	**Do The Dishes**	**14**
X	X	X	X	X	**Sleep In**	**14**
X	X	X	X	X	**Eat Vegetables**	**14**
X	X	X	X	X	**Relax**	**12**
X	X	X	X	X	**Do Laundry**	**13**
X	X	X	X	X	**Watch Sports**	**10**
X	X	X	X	X	**Pick Up Clothes**	**11**
X	X	X	X	X	**Dinner Out**	**9**

▼ *FOLD LINE* ▼

GAME 36

X	X	X	X	X	**9**	**Dinner Out**
X	X	X	X	X	**11**	**Pick Up Clothes**
X	X	X	X	X	**10**	**Watch Sports**
X	X	X	X	X	**13**	**Do Laundry**
X	X	X	X	X	**12**	**Relax**
X	X	X	X	X	**14**	**Eat Vegetables**
X	X	X	X	X	**14**	**Sleep In**
X	X	X	X	X	**14**	**Do The Dishes**
7	**Time With Family**				**24**	**Go To Church**
X	X	X	X	X	**28**	**Take Out Trash**

QUES #3 NAME SOMETHING PARIS HILTON SAYS SHE DOES EVERY DAY.

FAST MONEY QUESTIONS — **MC SIDE**

FM 1 WHICH MAN IS THE ULTIMATE PLAYBOY?
FM 2 NAME SOMETHING PEOPLE DO WHEN THEY REALIZE THEY'VE BEEN LOSING INTEREST IN THEIR SPOUSE.
FM 3 NAME SOMETHING A CHEF DOES TO A POTATO THAT YOU WOULDN'T WANT DONE TO YOU.
FM 4 NAME AN ATHLETE YOU'D LIKE TO SEE TAKE A LIE DETECTOR TEST.
FM 5 NAME AN ANIMAL THAT YOU THINK OF AS DIRTY.

Talk 2

HUGH HEFNER 87 | GEORGE CLOONEY 7 | JAMES BOND 2

X X X X X

CHEAT/AFFAIR 41 | LOOK ELSEWHERE 10 | GET COUNSELING 7

X X X X X

CHOPPED/SLICE 29 | GET PEELED 24 | GET MASHED 20

X X X X X

BARRY BOND 36 | O.J. SIMPSON 15 | ROGER CLEMENS 12

X X X X X

PIG 51 | RAT 19 | SKUNK 5

Shops/Spend $ 44

MEL GIBSON 2 | BRAD PITT 2 | CHARLIE SHEEN 2

Plays w/ Dog 10

SPICE UP MARRIAGE 6

Party/Drink 6

GET BOILED 7 | GET BAKED 7 | GET FRIED 4

Looks In Mirror 5

KOBE BRYANT 10 | MIKE TYSON 3 | TIGER WOODS 3

Her Hair/Shower 4

CHICKEN 4 | CAT 2 | WORM 2

▼ *FOLD LINE* ▼

PIG 51 | RAT 19 | SKUNK 5 | CHICKEN 4 | CAT 2 | WORM 2

Her Hair/Shower 4

X X X X X

BARRY BOND 36 | O.J. SIMPSON 15 | ROGER CLEMENS 12 | KOBE BRYANT 10 | MIKE TYSON 3 | TIGER WOODS 3

Looks In Mirror 5

X X X X X

CHOPPED/SLICE 29 | GET PEELED 24 | GET MASHED 20 | GET BOILED 7 | GET BAKED 7 | GET FRIED 4

Party/Drink 6

X X X X X

CHEAT/AFFAIR 41 | LOOK ELSEWHERE 10 | GET COUNSELING 7 | SPICE UP MARRIAGE 6

Plays w/ Dog 10

X X X X X

HUGH HEFNER 87 | GEORGE CLOONEY 7 | JAMES BOND 2 | MEL GIBSON 2 | BRAD PITT 2 | CHARLIE SHEEN 2

Shops/Spend $ 44 | Talk 2

QUES #1 NAME AN OCCASION A WOMAN THINKS IS IMPORTANT AND A MAN THINKS IS A NUISANCE.

QUES #2 NAME SOMETHING YOU OWN THAT YOU NOW WISH YOU COULD UNLOAD.

MC SIDE

Hair Appointment	3				Anniversary	62
Pets	6				Car/Truck	18
Mother's Day	3				Valentine's Day	18
Clothes/Shoes	5				Desk/Furniture	13
X	X	X	X	X	Cleaning House	4
X	X	X	X	X	House/Mobile Home	10
X	X	X	X	X	Birthday	3
X	X	X	X	X	Computer/Parts	7
X	X	X	X	X	Wedding	3
X	X	X	X	X	Exercise Equip.	6

▼ FOLD LINE ▼

GAME 37

X	X	X	X	X	Exercise Equip.	6
X	X	X	X	X	Wedding	3
X	X	X	X	X	Computer/Parts	7
X	X	X	X	X	Birthday	3
X	X	X	X	X	House/Mobile Home	10
X	X	X	X	X	Cleaning House	4
Clothes/Shoes	5				Desk/Furniture	13
Mother's Day	3				Valentine's Day	18
Pets	6				Car/Truck	18
Hair Appointment	3				Anniversary	62

QUES #3 NAME A PART OF YOUR FAMILY BUDGET THAT'S COSTING MORE THAN EVER BEFORE.

FAST MONEY QUESTIONS **MC SIDE**

FM 1 NAME A PART OF THEIR OWN BODIES THAT PEOPLE BITE.
FM 2 NAME AN ITEM THAT WOULD BE HARD TO STEAL FROM A HOTEL ROOM.
FM 3 WE ASKED 100 MEN…NAME SOMETHING THAT YOU THINK IS BAD MANNERS FOR A WOMAN TO DO IN PUBLIC.
FM 4 NAME SOMETHING EVERYONE WANTS TO KEEP SAFE.
FM 5 NAME SOMETHING A MILLIONAIRE WOULD SPEND A MILLION DOLLARS ON.

Electricity 4

FINGERS/HAND 65 | LIP 19 | TONGUE 5

School Tuition 4

TELEVISION 44 | BED 33 | BEDDING 7

Health Care 3

TOOT 18 | PICK NOSE 17 | BELCH/BURP 14

X X X X X

Family Events 7

MONEY/BANK ACCOUNTS 41 | FAMILY/CHILDREN 35 | HOUSE/HOME 5

X X X X X

Heating 6

HOUSE/MANSION 56 | BOAT/YACHT 11 | CAR 10

Gasoline/Car 43

ARM 5 | INSIDE CHEEK 3 | FOOT/TOES 2

Food 16

PICTURE/PAINTING 4 | CHAIR 2 | PILLOW 2

Rent/Mortgage 10

SPIT 9 | SWEAR 8 | BREAST FEED 7

Family Events 7

LIFE/THEMSELVES 5 | VALUABLES/JEWELRY 3 | THEIR HEART 2

Heating 6

JEWELRY/RING 4 | AIRPLANE 3 | TRAVEL/VACATION 3

▼ *FOLD LINE* ▼

Gasoline/Car 43

FINGERS/HAND 65 | LIP 19 | TONGUE 5

Food 16

TELEVISION 44 | BED 33 | BEDDING 7

Rent/Mortgage 10

TOOT 18 | PICK NOSE 17 | BELCH/BURP 14

Health Care 3

SPIT 9 | SWEAR 8 | BREAST FEED 7

School Tuition 4

ARM 5 | INSIDE CHEEK 3 | FOOT/TOES 2

Electricity 4

MONEY/BANK ACCOUNTS 41 | FAMILY/CHILDREN 35 | HOUSE/HOME 5

Family Events 7

HOUSE/MANSION 56 | BOAT/YACHT 11 | CAR 10

Heating 6

QUES #1 WE ASKED 100 MEN…NAME A FAMOUS WOMAN YOU'D NEVER WANT TO POP OUT OF YOUR BIRTHDAY CAKE IN HER BIRTHDAY SUIT.

QUES #2 NAME SOMETHING A PASSENGER IN A CAR MIGHT WISH THE DRIVER WOULD STOP DOING.

MC SIDE

Oprah Winfrey					**3**	**Rosie O'Donnell** **29**
Smoking					**5**	**Speeding** **20**
X	X	X	X	X		**Hillary Clinton** **19**
Tailgating					**5**	**Singing** **16**
X	X	X	X	X		**Britney Spears** **12**
Playing With Radio					**5**	**Talking/Cell** **14**
X	X	X	X	X		**Phyllis Diller** **9**
X	X	X	X	X		**Swerving/Weaving** **7**
X	X	X	X	X		**Roseanne Barr** **4**
X	X	X	X	X		**Being A Backseat Driver** **7**

▼ *FOLD LINE* ▼

GAME 38

X	X	X	X	X		**Being A Backseat Driver** **7**
X	X	X	X	X		**Roseanne Barr** **4**
X	X	X	X	X		**Swerving/Weaving** **7**
X	X	X	X	X		**Phyllis Diller** **9**
X	X	X	X	X		**Talking/Cell** **14**
Playing With Radio					**5**	**Britney Spears** **12**
X	X	X	X	X		**Singing** **16**
Tailgating					**5**	**Hillary Clinton** **19**
X	X	X	X	X		**Speeding** **20**
Smoking					**5**	**Rosie O'Donnell** **29**
Oprah Winfrey					**3**	

QUES #3 NAME A WAY EGGS ARE PREPARED THAT SOMEONE MIGHT SAY THEIR BRAIN FEELS LIKE.

FAST MONEY QUESTIONS **MC SIDE**

FM 1 NAME SOMETHING EVERY SECRETARY WOULD LOVE TO TELL HER BOSS TO DO FOR HIMSELF.
FM 2 NAME A GIFT MOMS COMMONLY RECEIVE ON MOTHER'S DAY.
FM 3 NAME A FAMOUS REAL OR FICTIONAL MOTHER.
FM 4 NAME SOMETHING PEOPLE OVERDO AT HOLIDAY TIME.
FM 5 NAME SOMETHING LOS ANGELES HAS A LOT OF THAT STARTS WITH AN "S."

X X X X X **Scrambled** **60**

GET COFFEE 76 ANSWER PHONE 9 SHOP FOR WIFE 4 TAKE NOTES 2 TRAVEL PLANS 2 PICK UP LAUNDRY 2

X X X X X **Fried** **23**

FLOWERS 61 CARDS 22 GIFTS 9 JEWELRY 4 CANDY 2

X X X X X **Over Easy** **8**

MOTHER TERESA 50 VIRGIN MARY 6 CAROL BRADY 5 PRINCESS DIANA 4 ANGELINA JOLIE 3 MOTHER GOOSE 3

X X X X X **Boiled** **5**

SPENDING $/GIFTS 64 EATING 12 DECORATIONS 12 DRINKING 6 GIFT WRAPPING 2

X X X X X **Poached** **2**

STARS 41 SMOG 20 STREETS 8 SUN/SUNSHINE 7 SIN/SINNERS 3 SHOPS/SHOPPING 2

▼ *FOLD LINE* ▼

SHOPS/SHOPPING 2 SIN/SINNERS 3 SUN/SUNSHINE 7 STREETS 8 SMOG 20 STARS 41

X X X X X **Poached** **2**

GIFT WRAPPING 2 DRINKING 6 DECORATIONS 12 EATING 12 SPENDING $/GIFTS 64

X X X X X **Boiled** **5**

MOTHER GOOSE 3 ANGELINA JOLIE 3 PRINCESS DIANA 4 CAROL BRADY 5 VIRGIN MARY 6 MOTHER TERESA 50

X X X X X **Over Easy** **8**

CANDY 2 JEWELRY 4 GIFTS 9 CARDS 22 FLOWERS 61

X X X X X **Fried** **23**

PICK UP LAUNDRY 2 TRAVEL PLANS 2 TAKE NOTES 2 SHOP FOR WIFE 4 ANSWER PHONE 9 GET COFFEE 76

X X X X X **Scrambled** **60**

QUES #1 WE ASKED 100 SINGLE MEN…NAME SOMETHING A GIRL HAS GOT TO LIKE DOING IF SHE'S THE RIGHT GIRL FOR YOU.

QUES #2 NAME A KIND OF PLACE WHERE YOU GET SERVICE WITH A SCOWL.

MC SIDE

Like/Play Sports					**3**	**Cooking** **21**
Car Wash					**4**	**Restaurant** **34**
X	X	X	X	X		**Watch TV/Sports** **16**
Gas Station					**4**	**DMV** **14**
X	X	X	X	X		**Time Together** **7**
X	X	X	X	X		**Store/Returns** **7**
X	X	X	X	X		**Her Appearance** **4**
X	X	X	X	X		**Bar** **6**
X	X	X	X	X		**Enjoy Life** **3**
X	X	X	X	X		**IRS** **5**

▼ *FOLD LINE* ▼

GAME 39

5	**IRS**	X	X	X	X	X
3	**Enjoy Life**	X	X	X	X	X
6	**Bar**	X	X	X	X	X
4	**Her Appearance**	X	X	X	X	X
7	**Store/Returns**	X	X	X	X	X
7	**Time Together**	X	X	X	X	X
14	**DMV**				**4**	**Gas Station**
16	**Watch TV/Sports**	X	X	X	X	X
34	**Restaurant**				**4**	**Car Wash**
21	**Cooking**				**3**	**Like/Play Sports**

QUES #3 TELL ME SOMETHING PEOPLE CAN DO TO STIMULATE THEIR MINDS.

FAST MONEY QUESTIONS **MC SIDE**

FM 1 NAME SOMETHING YOU DON'T WANT TO LEAVE IN YOUR CAR AT A CAR WASH.
FM 2 NAME SOMETHING MOTHERS MAKE SICK KIDS DRINK.
FM 3 NAME AN ANIMAL A DRIVER MIGHT SEE STANDING IN THE MIDDLE OF THE ROAD.
FM 4 NAME SOMETHING THAT PEOPLE BLAME THEIR GRAY HAIRS ON.
FM 5 NAME SOMETHING YOU DO TO BE MORE "GREEN" AND EARTH-FRIENDLY.

Write 2

MONEY/WALLET 54 | PURSE 17 | CHILD 7

X X X X X

GINGER ALE/SODA 24 | WATER 11 | JUICE 11

X X X X X

DEER 65 | SQUIRREL 9 | DOG 6

X X X X X

KIDS 64 | STRESS/WORRY 27 | JOB 3

X X X X X

RECYCLE 48 | SAVE ENERGY 11 | STOP DRIVING 9

Read 75

KEYS 5 | PET 3

Do Puzzles 5

COUGH SYRUP 10 | SOUP/BROTH 9 | MEDICINE 7

Exercise 5

POSSUM 4 | COW 4

Meditate 3

SPOUSE/MATE 3 | AGE 2

Sleep 3

VOTE 5 | CONSERVE WATER 3 | PAY BILLS ONLINE 3

▼ *FOLD LINE* ▼

Read 75 | MONEY/WALLET 54 | PURSE 17 | CHILD 7 | KEYS 5 | PET 3

Do Puzzles 5 | GINGER ALE/SODA 24 | WATER 11 | JUICE 11 | COUGH SYRUP 10 | SOUP/BROTH 9 | MEDICINE 7

Exercise 5 | DEER 65 | SQUIRREL 9 | DOG 6 | POSSUM 4 | COW 4

Meditate 3 | KIDS 64 | STRESS/WORRY 27 | JOB 3 | SPOUSE/MATE 3 | AGE 2

Sleep 3 | RECYCLE 48 | SAVE ENERGY 11 | STOP DRIVING 9 | VOTE 5 | CONSERVE WATER 3 | PAY BILLS ONLINE 3

Write 2 | MONEY/WALLET 54 | PURSE 17 | CHILD 7 | KEYS 5 | PET 3

QUES #1 WE ASKED 100 WOMEN…WHAT WOULD YOU DO IF YOUR GUY GAVE YOU A NECKLACE THAT WAS UGLY?

QUES #2 NAME AN ANIMAL THAT GRUNTS.

MC SIDE

X	X	X	X	X	**Keep It/"Thanks"**	**63**
Horse				**2**	**Pig/Hog**	**72**
X	X	X	X	X	**Tell The Truth**	**13**
X	X	X	X	X	**Dog**	**14**
X	X	X	X	X	**Return/Exchange**	**10**
X	X	X	X	X	**Bear**	**5**
X	X	X	X	X	**Never Wear It**	**6**
X	X	X	X	X	**Ape/Monkey**	**4**
X	X	X	X	X	**Be Unhappy**	**3**
X	X	X	X	X	**Elephant**	**2**

▼ *FOLD LINE* ▼

GAME 40

X	X	X	X	X	**Elephant**	**2**
X	X	X	X	X	**Be Unhappy**	**3**
X	X	X	X	X	**Ape/Monkey**	**4**
X	X	X	X	X	**Never Wear It**	**6**
X	X	X	X	X	**Bear**	**5**
X	X	X	X	X	**Return/Exchange**	**10**
X	X	X	X	X	**Dog**	**14**
X	X	X	X	X	**Tell The Truth**	**13**
2			**Horse**		**Pig/Hog**	**72**
X	X	X	X	X	**Keep It/"Thanks"**	**63**

QUES #3 NAME SOMETHING TIGHT A WOMAN LEARNS HOW TO SQUEEZE INTO.

FAST MONEY QUESTIONS **MC SIDE**

FM 1 NAME SOMETHING THAT HAPPENED TO SNOW WHITE.
FM 2 NAME SOMETHING OF HER HUSBAND'S A WIFE MIGHT EMPTY.
FM 3 NAME SOMETHING THAT STARTS WITH "THE DAILY…".
FM 4 NAME SOMETHING PEOPLE REGRET LENDING TO FRIENDS.
FM 5 TELL ME SOMETHING THAT'S SUPPOSED TO KEEP YOU YOUNG.

Shoes 2

ATE POISON APPLE 33 | LIVED WITH 7 DWARFS 22 | FELL ASLEEP 19

Pants 64

KISSED BY PRINCE 15 | HAPPILY EVER AFTER 6

A Skirt 2

WALLET 40 | POCKETS 25 | BANK ACCOUNT 9

X X X X X

NEWS 64 | PLANET 10 | SHOW 8

X X X X X

MONEY 79 | CARS 11 | CLOTHES 4

X X X X X

EXERCISE 41 | FADE CREAM/LOTION 12 | CHILDREN 6

A Griddle 9

ASHTRAY 7 | BEER 4 | DRAWER 2

A Dress 8

NUMBER 7 | GRIND 5 | NEWSPAPER 4

Pantyhose 6

SHOVEL 2 | TOOLS 2

A Bra 3

SLEEP 5 | VITAMINS/HERBS 5

▼ *FOLD LINE* ▼

Shoes 2

ATE POISON APPLE 33 | LIVED WITH 7 DWARFS 22 | FELL ASLEEP 19

Pants 64

KISSED BY PRINCE 15 | HAPPILY EVER AFTER 6

A Skirt 2

WALLET 40 | POCKETS 25 | BANK ACCOUNT 9

X X X X X

NEWS 64 | PLANET 10 | SHOW 8

X X X X X

MONEY 79 | CARS 11 | CLOTHES 4

X X X X X

EXERCISE 41 | FADE CREAM/LOTION 12 | CHILDREN 6

A Griddle 9

ASHTRAY 7 | BEER 4 | DRAWER 2

A Dress 8

NUMBER 7 | GRIND 5 | NEWSPAPER 4

Pantyhose 6

SHOVEL 2 | TOOLS 2

A Bra 3

SLEEP 5 | VITAMINS/HERBS 5

QUES #1 WHAT TYPE OF VEHICLE WOULD YOU HATE TO SEE PARKED IN FRONT OF YOUR HOUSE WHEN YOU COME HOME FROM WORK?

QUES #2 NAME A KIND OF PLACE THAT'S NOT MUCH FUN TO GO TO UNLESS YOU HAVE A LOT OF SPENDING MONEY.

MC SIDE

Garbage Truck	4
A Fair	4
X X X X X	
Shopping	3
X X X X X	
X X X X X	
X X X X X	
X X X X X	
X X X X X	
X X X X X	

Police Car	40
Casino	35
Ambulance	17
Las Vegas	18
Fire Engine	7
Disneyland/World	11
Hearse	4
The Mall	10
Jalopy	4
New York City	5

▼ *FOLD LINE* ▼

GAME 41

X X X X X	
X X X X X	
X X X X X	
X X X X X	
X X X X X	
X X X X X	
Garbage Truck	4
A Fair	4
X X X X X	
Shopping	3
X X X X X	
X X X X X	
X X X X X	
X X X X X	
X X X X X	
X X X X X	

Police Car	40
Casino	35
Ambulance	17
Las Vegas	18
Fire Engine	7
Disneyland/World	11
Hearse	4
The Mall	10
Jalopy	4
New York City	5

QUES #3 IN THE FUTURE, NAME SOMETHING YOU HOPE TO HAVE THAT WILL BE BETTER THAN THE ONE YOU HAVE NOW.

FAST MONEY QUESTIONS **MC SIDE**

FM 1 NAME SOMETHING YOU WOULD HATE TO SEE CHASING YOU.
FM 2 NAME SOMETHING AN INSOMNIAC MIGHT DO AFTER MIDNIGHT INSTEAD OF FALLING ASLEEP.
FM 3 NAME A PLACE WHERE EVERYONE KNOWS YOUR NAME.
FM 4 NAME THE FIRST THING A TEENAGER DOES WHEN HE GETS HOME FROM SCHOOL.
FM 5 NAME SOMETHING THAT STARTS WITH "QUEEN OF…".

A Computer 5

BEAR 17 | DOG 15 | POLICE OFFICER 14

A Job 4

WATCH TV 49 | READ 17 | COMPUTER/ONLINE 10

Health 3

CHEERS/BAR 24 | WORK 24 | HOME 18

X X X X X

SOMETHING TO EAT/DRINK 59 | DROP BOOKS/SCHOOLBAG 12 | PHONE CALL 8

X X X X X

HEARTS 32 | ENGLAND 15 | THE NILE 8

A Car 31

LION 13 | SNAKE 12 | BULL 5

A House 25

RAID THE FRIDGE 10 | PACE THE FLOOR 2 | PLAY VIDEO GAMES 2

Money 9

CHURCH 7 | SCHOOL 6

My Body 7

COMPUTER 7 | TAKES SHOES OFF 2

Quality Of Life 5

SPADES 5 | KINGS 5 | SCOTS 4

▼ *FOLD LINE* ▼

SCOTS 4 KINGS 5 SPADES 5 THE NILE 8 ENGLAND 15 HEARTS 32

Quality Of Life 5

X X X X X

TAKES SHOES OFF 2 COMPUTER 7 PHONE CALL 8 DROP BOOKS/SCHOOLBAG 12 SOMETHING TO EAT/DRINK 59

My Body 7

X X X X X

SCHOOL 6 CHURCH 7 HOME 18 WORK 24 CHEERS/BAR 24

Money 9 Health 3

PLAY VIDEO GAMES 2 PACE THE FLOOR 2 RAID THE FRIDGE 10 COMPUTER/ONLINE 10 READ 17 WATCH TV 49

A House 25 A Job 4

BULL 5 SNAKE 12 LION 13 POLICE OFFICER 14 DOG 15 BEAR 17

A Car 31 A Computer 5

QUES #1 NAME THE GIFT YOU'VE GOTTEN FROM YOUR SPOUSE THAT YOU CHERISH THE MOST.

QUES #2 NAME SOMETHING THAT STARTS WITH THE WORD "WORK."

MC SIDE

Clothing/Shoes					**3**	**Ring/Jewelry** **56**
Workforce					**8**	**Workaholic** **24**
X	X	X	X	X		**Child** **8**
Workshop					**3**	**Workhorse** **17**
X	X	X	X	X		**Vacation** **4**
X	X	X	X	X		**Workplace** **10**
X	X	X	X	X		**Watch** **3**
X	X	X	X	X		**Workday** **10**
X	X	X	X	X		**Their Heart** **3**
X	X	X	X	X		**Workweek** **11**

▼ *FOLD LINE* ▼

GAME 42

X	X	X	X	X	**11**	**Workweek**
X	X	X	X	X	**3**	**Their Heart**
X	X	X	X	X	**10**	**Workday**
X	X	X	X	X	**3**	**Watch**
X	X	X	X	X	**10**	**Workplace**
X	X	X	X	X	**4**	**Vacation**
X	X	X	X	X	**17**	**Workhorse**
X	X	X	X	X	**8**	**Child**
3		**Workshop**				
X	X	X	X	X	**24**	**Workaholic**
8		**Workforce**				
3		**Clothing/Shoes**				**56** **Ring/Jewelry**

QUES #3 WHAT'S SOMETHING A KID DOES THAT HE MIGHT BLAME ON THE FAMILY DOG.

FAST MONEY QUESTIONS **MC SIDE**

FM 1 NAME A PHRASE THAT STARTS WITH THE WORD "SPRING."
FM 2 NAME SOMETHING YOU APPLY DIRECTLY TO YOUR BODY.
FM 3 BESIDES THEIR SPOUSES, NAME SOMEONE FOR WHOM MEN BUY FLOWERS.
FM 4 NAME SOMETHING THAT WILL CAUSE DEHYDRATION.
FM 5 NAME SOMETHING THAT MIGHT GIVE YOU AN UPSET STOMACH.

Wets Bed/Floor 7

SPRING AHEAD/FORWARD 24 SPRING INTO ACTION 10 SPRING HAS SPRUNG 10

Brings In Mud 3

LOTION/CREAM 80 DEODORANT 6 SOAP 5

X X X X X

MOTHER 68 GIRLFRIEND 14 SECRETARY 5

X X X X X

SUN/HEAT 34 ALCOHOL/BEER 17 SALT 13

X X X X X

SPICY FOOD 34 STRESS 13 GREASY FOOD 6

Break/Knock Something Over 33

SPRING TIME 10 SPRING CHICKEN 9 SPRING FEVER 7

Spills Something 18

PERFUME/COLOGNE 3 MAKE UP 2 BABY OIL 2

Destroys Homework 12

DAUGHTER 4 FRIEND 2 IN-LAWS 2

Passes Gas 11

EXERCISE/RUNNING 13 COFFEE 6 SODA POP 5

Eats Food 8

EATING TOO MUCH 6 BEANS 4 MILK 3

▼ *FOLD LINE* ▼

Eats Food 8

SPICY FOOD 34 STRESS 13 GREASY FOOD 6

X X X X X

EATING TOO MUCH 6 BEANS 4 MILK 3

Passes Gas 11

SUN/HEAT 34 ALCOHOL/BEER 17 SALT 13

X X X X X

EXERCISE/RUNNING 13 COFFEE 6 SODA POP 5

Destroys Homework 12

MOTHER 68 GIRLFRIEND 14 SECRETARY 5

X X X X X

DAUGHTER 4 FRIEND 2 IN-LAWS 2

Spills Something 18

LOTION/CREAM 80 DEODORANT 6 SOAP 5

PERFUME/COLOGNE 3 MAKE UP 2 BABY OIL 2

Brings In Mud 3

SPRING AHEAD/FORWARD 24 SPRING INTO ACTION 10 SPRING HAS SPRUNG 10

Wets Bed/Floor 7

SPRING TIME 10 SPRING CHICKEN 9 SPRING FEVER 7

Break/Knock Something Over 33

QUES #1 WE ASKED 100 WOMEN…NAME SOMETHING MEN THINK THEY KNOW MORE ABOUT THAN WOMEN.

QUES #2 NAME AN OCCUPATION THAT REQUIRES STRENGTH, NOT SMARTS.

Cooking					4	Sports 21
Dock Worker					4	Athlete 29
X	X	X	X	X		Car/Driving 19
X	X	X	X	X		Construction 25
X	X	X	X	X		Money/Work 7
X	X	X	X	X		Laborer 7
X	X	X	X	X		Directions 6
X	X	X	X	X		Ditch Digger 5
X	X	X	X	X		Women 5
X	X	X	X	X		Garbage Collector 4

▼ *FOLD LINE* ▼

X	X	X	X	X	4	Garbage Collector
X	X	X	X	X	5	Women
X	X	X	X	X	5	Ditch Digger
X	X	X	X	X	6	Directions
X	X	X	X	X	7	Laborer
X	X	X	X	X	7	Money/Work
X	X	X	X	X	25	Construction
X	X	X	X	X	19	Car/Driving
					29	Athlete
					4	Dock Worker
					21	Sports
					4	Cooking

QUES #3 NAME AN ARTICLE OF CLOTHING THAT HARDLY EVER CHANGES STYLE.

FAST MONEY QUESTIONS **MC SIDE**

FM 1 NAME A BEVERAGE THAT STARTS WITH THE LETTER "C."
FM 2 NAME SOMETHING AFTER WHICH YOU LIKE TO RELAX IN A NICE HOT BATH.
FM 3 NAME SOMETHING PEOPLE ACCIDENTALLY WALK INTO.
FM 4 WHAT IS SOMETHING YOU HAVE A HARD TIME GETTING OUT OF?
FM 5 NAME SOMEPLACE YOU DREAD GOING TO, BUT FORCE YOURSELF.

X X X X X **Underwear 33**

COKE/COLA 61 COFFEE 24 CHAMPAGNE 4 CRANBERRY JUICE 3 COORS 2

X X X X X **Jeans/Pants 24**

WORK 34 EXERCISE/SPORTS 21 YARD WORK 16 HOUSEWORK 3 SHOVELING SNOW 3

X X X X X **Socks 20**

DOORS 26 WALLS 20 POLES/POSTS 9 GLASS/WINDOW 5 EACH OTHER 3 PUDDLES 3

X X X X X **Sweaters 4**

WORK 16 BED 16 DEBT 11 TIGHT CLOTHES 9 FAMILY FUNCTION 7

X X X X X **Men's Suits 3**

DENTIST/DOCTOR 28 WORK 21 FUNERAL 10 CHURCH 6 SCHOOL 6 FAMILY GATHERING 6

▼ *FOLD LINE* ▼

X X X X X **Men's Suits 3**

DENTIST/DOCTOR 28 WORK 21 FUNERAL 10 CHURCH 6 SCHOOL 6 FAMILY GATHERING 6

X X X X X **Sweaters 4**

WORK 16 BED 16 DEBT 11 TIGHT CLOTHES 9 FAMILY FUNCTION 7

X X X X X **Socks 20**

DOORS 26 WALLS 20 POLES/POSTS 9 GLASS/WINDOW 5 EACH OTHER 3 PUDDLES 3

X X X X X **Jeans/Pants 24**

WORK 34 EXERCISE/SPORTS 21 YARD WORK 16 HOUSEWORK 3 SHOVELING SNOW 3

X X X X X **Underwear 33**

COKE/COLA 61 COFFEE 24 CHAMPAGNE 4 CRANBERRY JUICE 3 COORS 2

QUES #1 NAME SOMETHING A DOG OWNER SHOULD DO FOR THE DOG'S PROTECTION. MC SIDE

QUES #2 WE POLLED 100 MARRIED WOMEN…NAME SOMETHING ANTONIO BANDERAS HAS THAT YOU WISH YOUR HUSBAND HAD.

Flea/Tick Care				**4**	**See Vet/Shots**	**36**
X	X	X	X	X	**His Money**	**25**
Training				**3**	**Leash/Tied Up**	**22**
X	X	X	X	X	**His Hair**	**21**
X	X	X	X	X	**ID Collar/Chip**	**16**
X	X	X	X	X	**His Voice/Accent**	**15**
X	X	X	X	X	**Spayed/Neuter**	**7**
X	X	X	X	X	**His Great Body**	**12**
X	X	X	X	X	**Fence/Enclosure**	**5**
X	X	X	X	X	**His Face/Eyes**	**12**

▼ *FOLD LINE* ▼

GAME 44

X	X	X	X	X	**His Face/Eyes**	**12**
X	X	X	X	X	**Fence/Enclosure**	**5**
X	X	X	X	X	**His Great Body**	**12**
X	X	X	X	X	**Spayed/Neuter**	**7**
X	X	X	X	X	**His Voice/Accent**	**15**
X	X	X	X	X	**ID Collar/Chip**	**16**
X	X	X	X	X	**His Hair**	**21**
Training				**3**	**Leash/Tied Up**	**22**
X	X	X	X	X	**His Money**	**25**
Flea/Tick Care				**4**	**See Vet/Shots**	**36**

QUES #3 WHAT'S THE ONE WORST ASPECT OF FLYING IN A PLANE?

FAST MONEY QUESTIONS **MC SIDE**

FM 1 NAME SOMETHING THE IRS MIGHT TAKE FROM YOU IF YOU OWED LOTS OF BACK TAXES.
FM 2 NAME A PART OF YOUR BODY YOU SOMETIMES SEEM TO HAVE NO CONTROL OVER.
FM 3 WE ASKED 100 WOMEN…NAME SOMETHING YOU'D HATE TO ACCIDENTALLY DROP YOUR RING INTO.
FM 4 NAME SOMETHING EVERY PERSON IN AMERICA SHOULD BE ABLE TO AFFORD.
FM 5 NAME SOMETHING A WAITRESS MIGHT DO THAT WOULD SPOIL YOUR DINNER.

Lines/Security 7

HOUSE 58 MONEY 24 CAR 9

X X X X X

MOUTH 55 STOMACH 15 BLADDER 9

X X X X X

SKIN/DRAIN 50 TOILET 39 SEWER 3

X X X X X

HOUSING 34 HEALTHCARE/DRUGS 21 CAR 17

X X X X X

SPILLS FOOD/DRINK 17 SLOW/MISTAKES 14 SPITS 10

Crashing/Falling 28

PROPERTY 5 JEWELRY 2

Turbulence 18

MIND/THOUGHTS 8 EYES 7 HANDS 7

Taking Off 10

ROAD/STREET 2 GARBAGE DISPOSAL 2

Landing 9

FOOD 14 EDUCATION 5 TV 4

Being So High Up 7

TOUCHES FOOD 7 RUDE/UNHAPPY 7 HAIR IN FOOD 6

▼ *FOLD LINE* ▼

SPILLS FOOD/DRINK 17 SLOW/MISTAKES 14 SPITS 10 TOUCHES FOOD 7 RUDE/UNHAPPY 7 HAIR IN FOOD 6

X X X X X

HOUSING 34 HEALTHCARE/DRUGS 21 CAR 17 FOOD 14 EDUCATION 5 TV 4

X X X X X

SKIN/DRAIN 50 TOILET 39 SEWER 3 ROAD/STREET 2 GARBAGE DISPOSAL 2

X X X X X

MOUTH 55 STOMACH 15 BLADDER 9 MIND/THOUGHTS 8 EYES 7 HANDS 7

X X X X X

HOUSE 58 MONEY 24 CAR 9 PROPERTY 5 JEWELRY 2

QUES #1 NAME A FAMOUS PERSON WHOSE GRAVESITE IS VISITED BY MILLIONS.

MC SIDE

QUES #2 NAME SOMETHING ABOUT YOU THAT'S DIFFERENT WHEN YOU WAKE UP FROM WHEN YOU WENT TO SLEEP LAST NIGHT.

Ulysses S. Grant					Elvis Presley	64
Different Weight					Messy Hair	34
Abraham Lincoln					Jim Morrison	6
X	X	X	X	X	Alert/Not Tired	20
X	X	X	X	X	John F. Kennedy	5
X	X	X	X	X	Bad Breath	11
X	X	X	X	X	Unknown Solider	4
X	X	X	X	X	Eyes Are Open	11
X	X	X	X	X	Martin Luther King Jr.	3
X	X	X	X	X	Attitude/Mood	5

▼ *FOLD LINE* ▼

GAME 45

Elvis Presley					Ulysses S. Grant	3
Messy Hair					Different Weight	3
Jim Morrison					Abraham Lincoln	3
Alert/Not Tired					X	X	X	X	X
John F. Kennedy					X	X	X	X	X
Bad Breath					X	X	X	X	X
Unknown Solider					X	X	X	X	X
Eyes Are Open					X	X	X	X	X
Martin Luther King Jr.					X	X	X	X	X
Attitude/Mood					X	X	X	X	X

QUES #3 COMPLETE THIS SENTENCE…
"I COULDN'T LIVE WITHOUT MY _____."

FAST MONEY QUESTIONS **MC SIDE**

FM 1 NAME SOMETHING BRIDES WANT TO BE PERFECT ON THEIR WEDDING DAY.
FM 2 TELL ME SOMETHING PEOPLE DISCUSS WHEN THEY JUST WANT TO MAKE CONVERSATION.
FM 3 NAME SOMETHING A MOM GETS TO DO WHEN HER BABY IS FINALLY ASLEEP.
FM 4 NAME A FAMOUS "BARBARA".
FM 5 NAME SOMETHING A SCHOOL TEACHER NEEDS A LOT OF.

Food 3

APPEARANCE 40 | WEATHER 18 | EVERYTHING 16

Coffee 3

WEATHER 69 | POLITICS 11 | CHILDREN/FAMILY 7

TV 3

RELAX/SLEEP 56 | CLEAN/HOUSEWORK 18 | EAT 4

X X X X X

BARBARA STREISAND 33 | BARBARA WALTERS 29 | BARBARA BUSH 23

X X X X X

PATIENCE 71 | PENCILS/PENS 4 | PAPERS 3

Spouse/Family 31

THE CEREMONY 11 | FLOWERS 4 | FOOD/CAKE 4

Computer/Internet 20

NEWS 4 | THEIR WORK 2 | SHOPPING 2

Cell Phone 8

WATCH TV 4 | READ 4 | COOK 3

Car 6

BARBARA EDEN 10 | BARBARA STANWYCK 3

Pets 4

CHALK 3 | BRAINS/KNOWLEDGE 3

▼ *FOLD LINE* ▼

Pets 4

PATIENCE 71 | PENCILS/PENS 4 | PAPERS 3 | CHALK 3 | BRAINS/KNOWLEDGE 3

X X X X X

Car 6

BARBARA STREISAND 33 | BARBARA WALTERS 29 | BARBARA BUSH 23 | BARBARA EDEN 10 | BARBARA STANWYCK 3

X X X X X

Cell Phone 8

RELAX/SLEEP 56 | CLEAN/HOUSEWORK 18 | EAT 4 | WATCH TV 4 | READ 4 | COOK 3

Computer/Internet 20

WEATHER 69 | POLITICS 11 | CHILDREN/FAMILY 7 | NEWS 4 | THEIR WORK 2 | SHOPPING 2

Coffee 3

TV 3

Spouse/Family 31

APPEARANCE 40 | WEATHER 18 | EVERYTHING 16 | THE CEREMONY 11 | FLOWERS 4 | FOOD/CAKE 4

Food 3

QUES #1 NAME AN ELECTRONIC DEVICE TEENAGERS THINK THEY COULDN'T LIVE WITHOUT. **MC SIDE**

QUES #2 NAME SOMETHING PEOPLE GO WITHOUT ON A CAMPING TRIP THAT THEY'D NEVER GO WITHOUT AT HOME.

X	X	X	X	X	**Cell Phone**	**65**
Air Conditioning					**Shower/Bath**	**31**
X	X	X	X	X	**IPod/MP3 Player**	**26**
X	X	X	X	X	**Toilet**	**23**
X	X	X	X	X	**Video Game Player**	**4**
X	X	X	X	X	**Electricity**	**8**
X	X	X	X	X	**Television**	**2**
X	X	X	X	X	**Bed**	**5**
X	X	X	X	X	**Computer**	**2**
X	X	X	X	X	**Toilet Paper**	**4**

▼ *FOLD LINE* ▼

GAME 46

X	X	X	X	X	**Toilet Paper**	**4**
X	X	X	X	X	**Computer**	**2**
X	X	X	X	X	**Bed**	**5**
X	X	X	X	X	**Television**	**2**
X	X	X	X	X	**Electricity**	**8**
X	X	X	X	X	**Video Game Player**	**4**
X	X	X	X	X	**IPod/MP3 Player**	**26**
X	X	X	X	X	**Toilet**	**23**
X	X	X	X	X	**Shower/Bath**	**31**
X	X	X	X	X	**Cell Phone**	**65**
Air Conditioning						**4**

QUES #3 WE ASKED 100 MARRIED WOMEN…NAME SOMETHING YOUR HUSBAND KNOWS HOW TO COOK BETTER THAN YOU DO.

FAST MONEY QUESTIONS **MC SIDE**

FM 1 GIVE ME AN EXPRESSION THAT USES THE WORD "DOG".
FM 2 NAME SOMETHING PEOPLE BUY "AS IS."
FM 3 NAME SOMETHING SCHOOL KIDS DO TO WIN A TRIP STRAIGHT TO THE PRINCIPAL'S OFFICE.
FM 4 NAME SOMETHING THAT MIGHT HAPPEN IF YOU SPENT ALL DAY IN A BATHTUB.
FM 5 NAME THE HISTORICAL FIGURE WHO HAS BEEN DEPICTED IN MORE MOVIES THAN ANY OTHER.

X X X X X **Pasta** **16**

DOG DAYS 16 DOGGONE IT 15 DOG-EAT-DOG WORLD 14 WHAT'S UP, DAWG? 8 YOU DOG 6

X X X X X **Fish/Seafood** **14**

CAR 56 HOUSE 18 FOOD 7 FURNITURE 6 CLOTHES 4 TV 4

X X X X X **Rice** **13**

FIGHT/HIT 33 TALK/TALK BACK 25 THROW SPIT BALLS 7 CHEAT ON TEST 6 DEFIANCE 4 DISRUPT CLASS 5

X X X X X **Eggs/Omelette** **12**

WRINKLES 80 FALL ASLEEP 4 DROWN 3 NOT FINISH CHORES 2 DRY SKIN 2 WATER GETS COLD 2

X X X X X **Chicken** **10**

ABRAHAM LINCOLN 27 JESUS 15 GEORGE WASHINGTON 14 CAESAR/JULIUS 9 STATUE OF LIBERTY 7

▼ *FOLD LINE* ▼

ABRAHAM LINCOLN 27 JESUS 15 GEORGE WASHINGTON 14 CAESAR/JULIUS 9 STATUE OF LIBERTY 7

X X X X X **Chicken** **10**

WRINKLES 80 FALL ASLEEP 4 DROWN 3 NOT FINISH CHORES 2 DRY SKIN 2 WATER GETS COLD 2

X X X X X **Eggs/Omelette** **12**

FIGHT/HIT 33 TALK/TALK BACK 25 THROW SPIT BALLS 7 CHEAT ON TEST 6 DEFIANCE 4 DISRUPT CLASS 5

X X X X X **Rice** **13**

CAR 56 HOUSE 18 FOOD 7 FURNITURE 6 CLOTHES 4 TV 4

X X X X X **Fish/Seafood** **14**

DOG DAYS 16 DOGGONE IT 15 DOG-EAT-DOG WORLD 14 WHAT'S UP, DAWG? 8 YOU DOG 6

X X X X X **Pasta** **16**

QUES #1 NAME SOMEONE PEOPLE GET NERVOUS IN FRONT OF.

MC SIDE

QUES #2 NAME SOMETHING YOU WOULD HATE TO FIND IN YOUR CELLAR.

X	X	X	X	X	**Police**	**20**
Cat				**2**	**Rat/Mouse**	**58**
X	X	X	X	X	**Boss**	**17**
Dead Body				**2**	**Bugs/Spiders**	**15**
X	X	X	X	X	**Minister/Priest**	**12**
X	X	X	X	X	**Water**	**12**
X	X	X	X	X	**Audience**	**12**
X	X	X	X	X	**Burglar**	**5**
X	X	X	X	X	**Judge**	**10**
X	X	X	X	X	**Snake**	**5**

▼ *FOLD LINE* ▼

GAME 47

X	X	X	X	X	**5**	**Snake**
X	X	X	X	X	**10**	**Judge**
X	X	X	X	X	**5**	**Burglar**
X	X	X	X	X	**12**	**Audience**
X	X	X	X	X	**12**	**Water**
X	X	X	X	X	**12**	**Minister/Priest**
X	X	X	X	X	**15**	**Bugs/Spiders**
2			**Dead Body**		**17**	**Boss**
X	X	X	X	X	**58**	**Rat/Mouse**
2			**Cat**		**20**	**Police**
X	X	X	X	X		

QUES #3 TELL ME SOMETHING YOUR CAR MIGHT NEED THAT WOULD MAKE YOU THINK ABOUT TRADING IT IN.

FAST MONEY QUESTIONS **MC SIDE**

FM 1 NAME A KIND OF PET YOU HAD DURING YOUR CHILDHOOD.
FM 2 NAME A REASON A POLICE OFFICER MIGHT COME TO YOUR FRONT DOOR.
FM 3 NAME SOMETHING A TEENAGE BOY MIGHT BORROW FROM HIS FATHER WITHOUT ASKING.
FM 4 NAME SOMEONE WHO MIGHT SAY TO YOU, "THERE'S GOOD NEWS AND BAD NEWS."
FM 5 WE ASKED 100 WOMEN…WHEN IT COMES TO MEN, NAME SOMEONE WHO'S AN OLDIE BUT A GOODIE.

X X X X X **Engine/Motor 49**

DOG 59 CAT 23 BIRD 5 TURTLE 4 HAMSTER 2 RABBIT 2

X X X X X **Transmission 37**

BAD NEWS/ACCIDENT 22 NOISE/LOUD PARTY 16 WARRANT/ARREST 15 NEIGHBOR TROUBLE 6 LOOK FOR SOMEONE 5

X X X X X **Alternator 2**

CAR 36 TIE/CLOTHING 25 RAZOR/SHAVER 18 COLOGNE 7 MONEY 6

X X X X X **A/C 2**

DOCTOR 39 BOSS 16 FRIEND 9 PARENT 9 MY CHILD 7 SPOUSE 4

X X X X X **Body Repairs/Paint 2**

HARRISON FORD 16 ROBERT REDFORD 13 CLINT EASTWOOD 12 SEAN CONNERY 12 ANTHONY HOPKINS 9 TONY BENNET 4

▼ *FOLD LINE* ▼

HARRISON FORD 16 ROBERT REDFORD 13 CLINT EASTWOOD 12 SEAN CONNERY 12 ANTHONY HOPKINS 9 TONY BENNET 4

X X X X X **Body Repairs/Paint 2**

DOCTOR 39 BOSS 16 FRIEND 9 PARENT 9 MY CHILD 7 SPOUSE 4

X X X X X **A/C 2**

CAR 36 TIE/CLOTHING 25 RAZOR/SHAVER 18 COLOGNE 7 MONEY 6

X X X X X **Alternator 2**

BAD NEWS/ACCIDENT 22 NOISE/LOUD PARTY 16 WARRANT/ARREST 15 NEIGHBOR TROUBLE 6 LOOK FOR SOMEONE 5

X X X X X **Transmission 37**

DOG 59 CAT 23 BIRD 5 TURTLE 4 HAMSTER 2 RABBIT 2

X X X X X **Engine/Motor 49**

QUES #1 NAME A US STATE THAT YOU'D CONSIDER MOVING TO WHEN YOU RETIRE.

MC SIDE

QUES #2 NAME SOMETHING THAT MAKES A MAN FEEL FREE.

Georgia				**4**	**Florida**	**33**
X	X	X	X	X	**Divorce/Single**	**16**
North Carolina				**4**	**California**	**19**
X	X	X	X	X	**Motorcycle**	**13**
X	X	X	X	X	**Arizona**	**8**
X	X	X	X	X	**Car/Truck**	**12**
X	X	X	X	X	**Hawaii**	**7**
X	X	X	X	X	**Money**	**9**
X	X	X	X	X	**Pennsylvania**	**7**
X	X	X	X	X	**Boy's Night/Poker**	**9**

▼ *FOLD LINE* ▼

GAME 48

X	X	X	X	X	**9**	**Boy's Night/Poker**
X	X	X	X	X	**7**	**Pennsylvania**
X	X	X	X	X	**9**	**Money**
X	X	X	X	X	**7**	**Hawaii**
X	X	X	X	X	**12**	**Car/Truck**
X	X	X	X	X	**8**	**Arizona**
X	X	X	X	X	**13**	**Motorcycle**
X	X	X	X	X	**19**	**California**
4		**North Carolina**			**16**	**Divorce/Single**
X	X	X	X	X	**33**	**Florida**
4		**Georgia**				

QUES #3 NAME SOMETHING A CONSTRUCTION WORKER UP ON A BEAM MIGHT DO THAT WOULD BOTHER THE PEOPLE BELOW.

FAST MONEY QUESTIONS **MC SIDE**

FM 1 NAME A PUBLIC PLACE WHERE YOU MIGHT SEE QUARRELING LOVERS MAKING A SCENE.
FM 2 NAME SOMETHING PEOPLE NEED TO TAKE WHEN TRAVELING WITH A BABY.
FM 3 NAME A REASON A WAITER OR WAITRESS CHASES AFTER A CUSTOMER.
FM 4 NAME SOMETHING A TAILOR AND A SURGEON USE ON THE JOB.
FM 5 NAME A PLACE YOU MIGHT LEAVE A NOTE SO EVERYONE IN THE HOUSE WILL SEE IT.

Walk Around 2

RESTAURANT 28	PARK 22	BAR/NIGHTCLUB 13
X	X	X

Spit 33

MALL 12	MOVIE THEATER 10

Tinkle 21

DIAPERS 58	BOTTLE 14	BABY BACKPACK 11
X	X	X

CAR SEAT 3	STROLLER 3

Drop Something 21

DIDN'T PAY 53	LEFT SOMETHING 33	DIDN'T LEAVE TIP 8
X	X	X

GIVE THEM CHANGE 4	GIVE THEM LEFTOVERS 1	SIGN CREDIT SLIP 1

Fall/Pretend To 5

NEEDLE 51	SCISSORS 23	THREAD 12
X	X	X

KNIFE/SCALPEL 7	THEIR HANDS 3

Jump Up And Down 3

REFRIGERATOR 53	KITCHEN TABLE/COUNTER 18	TV 10
X	X	X

FRONT DOOR 7	ON PHONE 6

▼ *FOLD LINE* ▼

Spit 33

RESTAURANT 28 PARK 22 BAR/NIGHTCLUB 13

MALL 12 MOVIE THEATER 10

Tinkle 21

DIAPERS 58 BOTTLE 14 BABY BACKPACK 11

CAR SEAT 3 STROLLER 3

Drop Something 21

DIDN'T PAY 53 LEFT SOMETHING 33 DIDN'T LEAVE TIP 8

GIVE THEM CHANGE 4 GIVE THEM LEFTOVERS 1 SIGN CREDIT SLIP 1

Fall/Pretend To 5

NEEDLE 51 SCISSORS 23 THREAD 12

KNIFE/SCALPEL 7 THEIR HANDS 3

Jump Up And Down 3

REFRIGERATOR 53 KITCHEN TABLE/COUNTER 18 TV 10

FRONT DOOR 7 ON PHONE 6

Walk Around 2

QUES #1 NAME SOMETHING PEOPLE DO IN THEIR CARS IF THEY THINK NO ONE IS WATCHING. MC SIDE

QUES #2 NAME SOMETHING PEOPLE SAY THEY DON'T LIKE ABOUT THE PLACE THEY WORK.

X	X	X	X	X	**Pick Nose**	**61**
X	X	X	X	X	**Boss/People**	**74**
X	X	X	X	X	**Make Out**	**21**
X	X	X	X	X	**Salary/Benefits**	**10**
X	X	X	X	X	**Sing**	**6**
X	X	X	X	X	**The Actual Work**	**9**
X	X	X	X	X	**Kiss**	**3**
X	X	X	X	X	**Hours**	**3**
X	X	X	X	X	X X X X X	
X	X	X	X	X	**Location/Commute**	**2**

▼ *FOLD LINE* ▼

X	X	X	X	X	**Location/Commute**	**2**
X	X	X	X	X	X X X X X	
X	X	X	X	X	**Hours**	**3**
X	X	X	X	X	**Kiss**	**3**
X	X	X	X	X	**The Actual Work**	**9**
X	X	X	X	X	**Sing**	**6**
X	X	X	X	X	**Salary/Benefits**	**10**
X	X	X	X	X	**Make Out**	**21**
X	X	X	X	X	**Boss/People**	**74**
X	X	X	X	X	**Pick Nose**	**61**

QUES #3 NAME SOMETHING THAT MOM YELLS AT HER FAMILY FOR NOT DOING.

FAST MONEY QUESTIONS **MC SIDE**

FM 1 NAME SOMETHING PEOPLE DO WHILE THEY'RE JOGGING ON A TREADMILL.
FM 2 NAME THE FIRST THING YOU SHOULD DO IF A POLICEMAN PULLS YOU OVER.
FM 3 NAME A REASON YOU MIGHT WALK OUT OF A REALLY FINE RESTAURANT.
FM 4 NAME SOMETHING A WIFE CAN ALWAYS FIND WHEN HER HUSBAND THINKS HE'S LOST IT.
FM 5 NAME A REASON YOU MIGHT HAVE TO STOP ON A LONG ROAD TRIP.

Washing Hands 3

LISTEN TO MUSIC/RADIO 52 | WATCH TV 19 | SWEAT 10

Take Off Shoes 2

LICENSE/INSURANCE 26 | PULL OVER/STOP 18 | SMILE/COOPERATE 13

X X X X X

BAD SERVICE 55 | BAD FOOD 10 | PRICE 9

X X X X X

KEYS 60 | WALLET/MONEY 19 | EYEGLASSES 8

X X X X X

BATHROOM BREAK 68 | GET FUEL 15 | TO EAT/DRINK 12

Cleanup/Chores 41

READ 7 | SING/HUM 5 | PANT 3

Pick Up Clothes 30

ROLL DOWN WINDOW 11 | HANDS ON WHEEL 11 | STAY CALM 5

Take Out Trash 6

WAIT TOO LONG 8 | BUGS/RATS 8 | HAIR IN FOOD 2

Listening To Her 6

CLOTHES/SHOES 5 | THE REMOTE 5

Calling Her 3

TAKE A REST 2 | CAR TROUBLE/FLAT 2

▼ *FOLD LINE* ▼

Cleanup/Chores 41

LISTEN TO MUSIC/RADIO 52 | WATCH TV 19 | SWEAT 10

Pick Up Clothes 30

READ 7 | SING/HUM 5 | PANT 3

Take Off Shoes 2

ROLL DOWN WINDOW 11 | HANDS ON WHEEL 11 | STAY CALM 5

Washing Hands 3

LICENSE/INSURANCE 26 | PULL OVER/STOP 18 | SMILE/COOPERATE 13

X X X X X

HAIR IN FOOD 2 | BUGS/RATS 8 | WAIT TOO LONG 8

Take Out Trash 6

X X X X X

BAD SERVICE 55 | BAD FOOD 10 | PRICE 9

Listening To Her 6

X X X X X

KEYS 60 | WALLET/MONEY 19 | EYEGLASSES 8

THE REMOTE 5 | CLOTHES/SHOES 5

Calling Her 3

X X X X X

CAR TROUBLE/FLAT 2 | TAKE A REST 2

BATHROOM BREAK 68 | GET FUEL 15 | TO EAT/DRINK 12

QUES #1 NAME ONE OF THE QUALITIES OF A GOOD PERSONALITY. MC SIDE

QUES #2 WE ASKED 100 MEN…NAME A CHRISTMAS GIFT YOU GET JUST ABOUT EVERY YEAR.

Happy/Cheerful				4	Sense Of Humor	44
X	X	X	X	X	Clothes/Shoes	79
X	X	X	X	X	Honest/Truthful	12
X	X	X	X	X	Money	5
X	X	X	X	X	Friendly	9
X	X	X	X	X	Cologne	4
X	X	X	X	X	Good Listener	7
X	X	X	X	X	Gift Certificate/Gift Card	4
X	X	X	X	X	Kindness	6
X	X	X	X	X	Jewelry	2

▼ *FOLD LINE* ▼

GAME 50

X	X	X	X	X	Jewelry	2
X	X	X	X	X	Kindness	6
X	X	X	X	X	Gift Certificate/Gift Card	4
X	X	X	X	X	Good Listener	7
X	X	X	X	X	Cologne	4
X	X	X	X	X	Friendly	9
X	X	X	X	X	Money	5
X	X	X	X	X	Honest/Truthful	12
X	X	X	X	X	Clothes/Shoes	79
X	X	X	X	X	Happy/Cheerful	4
					Sense Of Humor	44

QUES #3 TELL ME SOMETHING ABOUT MARS.

FAST MONEY QUESTIONS MC SIDE

FM 1 NAME SOMETHING CHILDREN ARE EMBARRASSED TO WEAR.
FM 2 NAME SOMETHING THAT ONE PERSON DOES THAT MIGHT AGGRAVATE EVERYONE ELSE IN THE ROOM.
FM 3 NAME A PLACE YOU HOPE HAS A REALLY CLEAN PUBLIC RESTROOM.
FM 4 WE ASKED 100 WOMEN…IF A GORGEOUS GUY ASKED YOU OUT, NAME A REASON YOU MIGHT SAY, "THANKS BUT NO THANKS."
FM 5 NAME AN OCCUPATION THAT'S HIGH STRESS FROM THE MOMENT YOU GO ON DUTY UNTIL YOU GO OFF DUTY.

X X X X X **It Is Red** **43**

SUITS/DRESSES 22 | OLD/HAND-ME-DOWN 16 | COATS/BOOTS 12 | EYEGLASSES 11 | TIE/BOW TIE 8 | NIGHTTIME UNDIES 5

X X X X X **It's A Planet** **16**

TALK LOUD/TOO MUCH 42 | TOOT 16 | SMOKE 12 | BLOW NOSE 9 | INTERRUPT PEOPLE 4 | HUM 4

X X X X X **Water Ice Caps** **10**

RESTAURANT 45 | HOSPITAL 15 | GAS STATION 6 | MALL 5 | DOCTOR'S OFFICE 4 | HIGHWAY REST STOP 3

X X X X X **Is Far Away** **5**

CONCEITED 27 | HE IS MARRIED 17 | HE IS DUMB 9 | DON'T KNOW HIM 6 | I AM MARRIED 6 | HE IS GAY 4

X X X X X **4th Planet From The Sun** **3**

POLICEMAN 42 | AIR TRAFFIC CONTROL 17 | NURSE 10 | DOCTOR 10 | TEACHER 6 | FIREFIGHTER 4

▼ *FOLD LINE* ▼

X X X X X **It Is Red** **43**

SUITS/DRESSES 22 | OLD/HAND-ME-DOWN 16 | COATS/BOOTS 12 | EYEGLASSES 11 | TIE/BOW TIE 8 | NIGHTTIME UNDIES 5

X X X X X **It's A Planet** **16**

TALK LOUD/TOO MUCH 42 | TOOT 16 | SMOKE 12 | BLOW NOSE 9 | INTERRUPT PEOPLE 4 | HUM 4

X X X X X **Water Ice Caps** **10**

RESTAURANT 45 | HOSPITAL 15 | GAS STATION 6 | MALL 5 | DOCTOR'S OFFICE 4 | HIGHWAY REST STOP 3

X X X X X **Is Far Away** **5**

CONCEITED 27 | HE IS MARRIED 17 | HE IS DUMB 9 | DON'T KNOW HIM 6 | I AM MARRIED 6 | HE IS GAY 4

X X X X X **4th Planet From The Sun** **3**

POLICEMAN 42 | AIR TRAFFIC CONTROL 17 | NURSE 10 | DOCTOR 10 | TEACHER 6 | FIREFIGHTER 4

QUES #1 WE ASKED 100 WOMEN…WHICH OCCUPATION HAS THE BEST-DRESSED MEN? MC SIDE

QUES #2 TELL ME ONE WORD YOU'D REALLY HOPE PEOPLE WOULD USE IN DESCRIBING THE KIND OF PERSON YOU ARE.

Doctor				3	Lawyer	30
Friendly				4	Kind	24
Police Officer				2	CEO	24
X	X	X	X	X	Honest	10
Actor/Star				2	Model	15
X	X	X	X	X	Caring	7
X	X	X	X	X	Military	10
X	X	X	X	X	Funny	6
X	X	X	X	X	Sales Person	4
X	X	X	X	X	Nice	6

▼ *FOLD LINE* ▼

GAME 51

X	X	X	X	X	6	Nice
X	X	X	X	X	4	Sales Person
X	X	X	X	X	6	Funny
X	X	X	X	X	10	Military
X	X	X	X	X	7	Caring
Actor/Star				2	15	Model
X	X	X	X	X	10	Honest
Police Officer				2	24	CEO
Friendly				4	24	Kind
Doctor				3	30	Lawyer

QUES #3 NAME A KIND OF FOOD THAT GETS STUCK IN YOUR TEETH.

FAST MONEY QUESTIONS **MC SIDE**

FM 1 WE ASKED 100 WOMEN... NAME SOMETHING YOUR HUSBAND DOES AROUND THE HOUSE THAT SCORES MAJOR POINTS WITH YOU.
FM 2 NAME A FAMOUS TOUGH GUY WHO COULD REALLY TAKE A PUNCH.
FM 3 NAME A FOOD YOU COULD STILL EAT EVEN IF YOU HAD NO TEETH.
FM 4 NAME A SPORT THAT RECENTLY BECAME POPULAR WITH FEMALE ATHLETES.
FM 5 NAME SOMETHING W IVES TRY TO GET BY NAGGING.

X X X X X **Corn/Popcorn 50**

CLEANS/DISHES 71 COOKS 11 WATCHES KIDS 8 FIXES THINGS 5 YARD WORK 5

X X X X X **Beef 14**

SLY STALLONE 14 CLINT EASTWOOD 12 SCHWARZENEGGER 11 JOHN WAYNE 11 MIKE TYSON 11 STEVEN SEGAL 9 MUHAMMAD ALI 8

X X X X X **Candy 6**

SOUP 20 MASHED POTATOES 15 BANANA 12 JELLO 12 APPLESAUCE 8 PASTA/NOODLES 8 ICE CREAM/SHAKE 6

X X X X X **Chicken 5**

BASKETBALL 34 TENNIS 20 BOXING 14 SOCCER 14 FOOTBALL 5

X X X X X **Peanut Butter 3**

MONEY 38 CHORE 15 ATTENTION 12 PRESENTS 12 CAR 11 THEIR WAY 5

▼ *FOLD LINE* ▼

THEIR WAY 5 CAR 11 PRESENTS 12 ATTENTION 12 CHORE 15 MONEY 38

X X X X X **Peanut Butter 3**

FOOTBALL 5 SOCCER 14 BOXING 14 TENNIS 20 BASKETBALL 34

X X X X X **Chicken 5**

ICE CREAM/SHAKE 6 PASTA/NOODLES 8 APPLESAUCE 8 JELLO 12 BANANA 12 MASHED POTATOES 15 SOUP 20

X X X X X **Candy 6**

MUHAMMAD ALI 8 STEVEN SEGAL 9 MIKE TYSON 11 JOHN WAYNE 11 SCHWARZENEGGER 11 CLINT EASTWOOD 12 SLY STALLONE 14

X X X X X **Beef 14**

YARD WORK 5 FIXES THINGS 5 WATCHES KIDS 8 COOKS 11 CLEANS/DISHES 71

X X X X X **Corn/Popcorn 50**

QUES #1 TELL ME SOMETHING THAT YOU MIGHT ACCIDENTALLY THROW INTO YOUR GARBAGE THAT WOULD SEND YOU DIGGING FOR IT.
QUES #2 TELL ME SOMETHING YOU STAND AROUND AND WAIT FOR BECAUSE SOMEONE ELSE IS USING IT.

X	X	X	X	X	**Jewelry/Watch**	**43**
X	X	X	X	X	**Bathroom**	**49**
X	X	X	X	X	**Money**	**14**
X	X	X	X	X	**Telephone**	**31**
X	X	X	X	X	**Check**	**10**
X	X	X	X	X	**ATM**	**5**
X	X	X	X	X	**Wallet**	**9**
X	X	X	X	X	**Car**	**4**
X	X	X	X	X	**Car Keys**	**9**
X	X	X	X	X	**Washing Machine**	**4**

▼ *FOLD LINE* ▼

X	X	X	X	X	**Washing Machine**	**4**
X	X	X	X	X	**Car Keys**	**9**
X	X	X	X	X	**Car**	**4**
X	X	X	X	X	**Wallet**	**9**
X	X	X	X	X	**ATM**	**5**
X	X	X	X	X	**Check**	**10**
X	X	X	X	X	**Telephone**	**31**
X	X	X	X	X	**Money**	**14**
X	X	X	X	X	**Bathroom**	**49**
X	X	X	X	X	**Jewelry/Watch**	**43**

QUES #3 PAST OR PRESENT, NAME A BOXING CHAMPION WHO WAS RESPECTED OUTSIDE THE RING AS MUCH AS HE WAS INSIDE THE RING.

FAST MONEY QUESTIONS

FM 1 WHAT'S THE BEST MAN RESPONSIBLE FOR AT A WEDDING?
FM 2 NAME A MOVIE THAT STARRED DENZEL WASHINGTON.
FM 3 NAME A SIGN A LITTLE KID HAS BEN IN A FIGHT.
FM 4 NAME SOMETHING YOU'VE BEEN BITTEN BY.
FM 5 NAME A GRIPE A DENTIST MIGHT HAVE ABOUT ONE OF HIS PATIENTS.

MC SIDE

Sugar Ray Leonard 3

RING 63 | TOAST 15 | GROOM ON TIME 11

X X X X X

JOHN Q 20 | TRAINGING DAY 20 | REMEMBER THE TITANS 11

X X X X X

BLACK EYE/BRUISES 54 | CRYING 15 | BLOODY NOSE 13

X X X X X

MOSQUITO 54 | DOG 19 | SPIDER 9

X X X X X

BAD BREATH 64 | DON'T BRUSH 12 | DON'T FLOSS 4

Muhammad Ali 70

SPEECH 4 | BACHELOR PARTY 3

Joe Louis 11

PHILADELPHIA 10 | OUT OF TIME 9 | FALLEN 8

Mike Tyson 5

SCRATCHES/CUTS 6 | CLOTHES RIPPED 4 | DIRTY PANTS 3

J. Cesar Chavez 5

BEE 8 | SNAKE 3

George Foreman 4

WON'T OPEN WIDE 4 | PAYING BILL 2 | NOT GOING OFTEN ENOUGH 2

▼ *FOLD LINE* ▼

Sugar Ray Leonard 3

SPEECH 4 | BACHELOR PARTY 3

X X X X X

PHILADELPHIA 10 | OUT OF TIME 9 | FALLEN 8

X X X X X

SCRATCHES/CUTS 6 | CLOTHES RIPPED 4 | DIRTY PANTS 3

X X X X X

BEE 8 | SNAKE 3

X X X X X

WON'T OPEN WIDE 4 | PAYING BILL 2 | NOT GOING OFTEN ENOUGH 2

Muhammad Ali 70

RING 63 | TOAST 15 | GROOM ON TIME 11

Joe Louis 11

JOHN Q 20 | TRAINGING DAY 20 | REMEMBER THE TITANS 11

Mike Tyson 5

BLACK EYE/BRUISES 54 | CRYING 15 | BLOODY NOSE 13

J. Cesar Chavez 5

MOSQUITO 54 | DOG 19 | SPIDER 9

George Foreman 4

BAD BREATH 64 | DON'T BRUSH 12 | DON'T FLOSS 4

QUES #1 NAME A PERSON YOU DON'T NECESSARILY LIKE, BUT ARE OBLIGED TO GET ALONG WITH.

QUES #2 NAME AN INSECT THAT REALLY BUGS YOU.

MC SIDE

X	X	X	X	X	**In-Law**	**33**
Bee/Wasp				**5**	**Mosquito**	**32**
X	X	X	X	X	**Boss**	**21**
X	X	X	X	X	**Roach**	**26**
X	X	X	X	X	**Co-Worker**	**10**
X	X	X	X	X	**Fly**	**21**
X	X	X	X	X	**Sibling**	**8**
X	X	X	X	X	**Spider**	**8**
X	X	X	X	X	**Neighbor**	**7**
X	X	X	X	X	**Ant**	**6**

▼ *FOLD LINE* ▼

GAME 53

X	X	X	X	X	**Ant**	**6**
X	X	X	X	X	**Neighbor**	**7**
X	X	X	X	X	**Spider**	**8**
X	X	X	X	X	**Sibling**	**8**
X	X	X	X	X	**Fly**	**21**
X	X	X	X	X	**Co-Worker**	**10**
X	X	X	X	X	**Roach**	**26**
X	X	X	X	X	**Boss**	**21**
5		**Bee/Wasp**			**Mosquito**	**32**
X	X	X	X	X	**In-Law**	**33**

QUES #3 WHAT ANIMAL IS MOST IMPORTANT TO MAN?

FAST MONEY QUESTIONS **MC SIDE**

FM 1 NAME SOMETHING LITTLE KIDS HAVE DIFFICULTY DOING FOR THEMSELVES.
FM 2 FOR WHOM DO YOU MOST ENJOY SHOPPING?
FM 3 NAME SOMETHING YOU BORROW FROM THE NEIGHBORS WHEN YOU'RE HAVING A PARTY.
FM 4 WHAT WOULD YOU SAY IS THE BIGGEST EXPENSE IN A VERY LARGE FAMILY?
FM 5 NAME A FAMOUS "MICKEY."

X X X X X **Dog** **67**

TYING SHOES 70 | GETTING DRESSED 9 | GOING POTTY 6 | TAKING BATH 4 | EATING/DRINKING 4

X X X X X **Cattle** **14**

MYSELF 54 | CHILDREN 22 | SPOUSE/MATE 8 | GRANDCHILDREN 7

X X X X X **Ape** **6**

CHAIRS 37 | ICE 11 | DISHES/BOWLS 11 | TABLES 10 | GRILL 8 | FOOD/DRINKS 7

X X X X X **Horse** **5**

FOOD 72 | EDUCATION 13 | HOUSE/RENT 5 | ELECTRICITY 4 | CLOTHES 3 | HEALTHCARE 2

X X X X X X X X X X

MICKEY MOUSE 78 | MICKEY MANTLE 12 | MICKEY ROONEY 8

▼ *FOLD LINE* ▼

MICKEY MOUSE 78 | MICKEY MANTLE 12 | MICKEY ROONEY 8

X X X X X X X X X X

FOOD 72 | EDUCATION 13 | HOUSE/RENT 5 | ELECTRICITY 4 | CLOTHES 3 | HEALTHCARE 2

Horse **5** X X X X X

CHAIRS 37 | ICE 11 | DISHES/BOWLS 11 | TABLES 10 | GRILL 8 | FOOD/DRINKS 7

Ape **6** X X X X X

MYSELF 54 | CHILDREN 22 | SPOUSE/MATE 8 | GRANDCHILDREN 7

Cattle **14** X X X X X

TYING SHOES 70 | GETTING DRESSED 9 | GOING POTTY 6 | TAKING BATH 4 | EATING/DRINKING 4

Dog **67** X X X X X

QUES #1 NAME AN ANIMAL THAT PEOPLE RIDE. MC SIDE

QUES #2 OF ALL THE TELEVISION TALK SHOW HOSTS, WHO WOULD YOU MOST LIKE TO HAVE OVER FOR DINNER?

X X X X X	Horse/Pony 88
Jillian Barberie 4	Oprah Winfrey 34
X X X X X	Camel 4
Ricki Lake 3	Jerry Springer 13
X X X X X	Donkey/Mule 3
X X X X X	Jenny Jones 12
X X X X X	X X X X X
X X X X X	Montel Williams 8
X X X X X	X X X X X
X X X X X	Jay Leno 5

▼ *FOLD LINE* ▼

X X X X X	Jay Leno 5
X X X X X	X X X X X
X X X X X	Montel Williams 8
X X X X X	X X X X X
X X X X X	Jenny Jones 12
X X X X X	Donkey/Mule 3
X X X X X	Jerry Springer 13
Ricki Lake 3	Camel 4
X X X X X	Oprah Winfrey 34
Jillian Barberie 4	Horse/Pony 88
X X X X X	

QUES #3 NAME SOMEONE FROM THE SIXTIES WHO APPEARS IN HIGH SCHOOL HISTORY BOOKS.

FAST MONEY QUESTIONS **MC SIDE**

FM 1 NAME A SPORT ASSOCIATED WITH ANOTHER COUNTRY.
FM 2 NAME A MOVIE OR TV SHOW THAT WAS SET IN OUTER SPACE.
FM 3 NAME SOMETHING THAT PEOPLE OFTEN DO BEFORE THEY GO ON A JOB INTERVIEW.
FM 4 NAME SOMETHING DRIVERS DO WHEN THEY GET LOST.
FM 5 NAME SOMETHING SOME PEOPLE HAVE A HARD TIME CLOSING.

X X X X X **John F. Kennedy 40**

SOCCER 75 CRICKET 13 RUGBY 6 TENNIS 3 POLO 2

X X X X X **M. L. King, Jr. 18**

STAR TREK 41 STAR WARS 13 LOST IN SPACE 10 2001 SPACE ODYS'Y 5 APOLLO 13 5 ARMAGEDDON 5

X X X X X **Rosa Parks 10**

DRESS UP 29 SHOWER 14 SHAVE 12 UPDATE RESUME 9 PRACTICE 7

X X X X X **Richard Nixon 6**

GET DIRECTIONS 47 KEEP DRIVING 16 STOP AT GAS STATION 15 GET MAD 6 LOOK AT MAP 5

X X X X X **Malcolm X 5**

MOUTH 25 SUITCASE 18 DOOR 16 JAR/BOTTLE LID 8 A GOOD BOOK 5

▼ *FOLD LINE* ▼

X X X X X **John F. Kennedy 40**

SOCCER 75 CRICKET 13 RUGBY 6 TENNIS 3 POLO 2

X X X X X **M. L. King, Jr. 18**

STAR TREK 41 STAR WARS 13 LOST IN SPACE 10 2001 SPACE ODYS'Y 5 APOLLO 13 5 ARMAGEDDON 5

X X X X X **Rosa Parks 10**

DRESS UP 29 SHOWER 14 SHAVE 12 UPDATE RESUME 9 PRACTICE 7

X X X X X **Richard Nixon 6**

GET DIRECTIONS 47 KEEP DRIVING 16 STOP AT GAS STATION 15 GET MAD 6 LOOK AT MAP 5

X X X X X **Malcolm X 5**

MOUTH 25 SUITCASE 18 DOOR 16 JAR/BOTTLE LID 8 A GOOD BOOK 5

QUES #1 NAME SOMETHING A DIVORCED COUPLE LITERALLY CANNOT CUT IN HALF.

MC SIDE

QUES #2 NAME SOMETHING KIDS ARE TOLD TO TAKE TURNS USING.

X	X	X	X	X	**Kids**	**70**
X	X	X	X	X	**Toys/Games**	**67**
X	X	X	X	X	**House**	**20**
X	X	X	X	X	**Bathroom**	**10**
X	X	X	X	X	**Rings**	**3**
X	X	X	X	X	**Phone**	**8**
X	X	X	X	X	X X X X X	
X	X	X	X	X	**Bikes**	**4**
X	X	X	X	X	X X X X X	
X	X	X	X	X	**Swing**	**4**

▼ *FOLD LINE* ▼

GAME 55

X	X	X	X	X	**Swing**	**4**
X	X	X	X	X	X X X X X	
X	X	X	X	X	**Bikes**	**4**
X	X	X	X	X	X X X X X	
X	X	X	X	X	**Phone**	**8**
X	X	X	X	X	**Rings**	**3**
X	X	X	X	X	**Bathroom**	**10**
X	X	X	X	X	**House**	**20**
X	X	X	X	X	**Toys/Games**	**67**
X	X	X	X	X	**Kids**	**70**

QUES #3 PAST OR PRESENT, NAME ANY FAMOUS WESTERN MOVIE STAR.

FAST MONEY QUESTIONS **MC SIDE**

FM 1 NAME SOMETHING YOU BUY THAT WOULD SUDDENLY BRING YOU A LOT OF NEW FRIENDS.
FM 2 NAME A SIGN THAT PEOPLE DISOBEY.
FM 3 NAME SOMETHING PEOPLE GET ON AND GET OFF.
FM 4 WHO DO YOU THINK HAD THE GREATEST MIND IN ALL OF HISTORY?
FM 5 ROSES ARE RED, VIOLETS ARE BLUE, TELL ME A POET WHO'S FAMOUS TO YOU.

X X X X X **John Wayne 52**

CAR 43 HOUSE/VACATION H. 19 BIG SCREEN TV 12 SWIMMING POOL 9

X X X X X **Clint Eastwood 19**

STOP 60 YIELD 9 DO NOT ENTER 8 NO LITTERING 5 SPEED LIMIT 4 NO SMOKING 4

X X X X X **Roy Rogers 7**

BUS 35 HORSE 22 TRAIN/SUBWAY 9 BIKES 6 FEET 4

X X X X X **Randolph Scott 6**

ALBERT EINSTEIN 69 BEN FRANKLIN 7 LEONARDO DA VINCI 5 MAHATMA GANDHI 5 JESUS CHRIST 4 MALCOLM X 3

X X X X X **Gene Autry 4**

EDGAR ALLEN POE 30 WILL SHAKESPEARE 19 ROBERT FROST 15 JOHN KEATS 12 MAYA ANGELOU 10

▼ *FOLD LINE* ▼

X X X X X **Gene Autry 4**

EDGAR ALLEN POE 30 WILL SHAKESPEARE 19 ROBERT FROST 15 JOHN KEATS 12 MAYA ANGELOU 10

X X X X X **Randolph Scott 6**

ALBERT EINSTEIN 69 BEN FRANKLIN 7 LEONARDO DA VINCI 5 MAHATMA GANDHI 5 JESUS CHRIST 4 MALCOLM X 3

X X X X X **Roy Rogers 7**

BUS 35 HORSE 22 TRAIN/SUBWAY 9 BIKES 6 FEET 4

X X X X X **Clint Eastwood 19**

STOP 60 YIELD 9 DO NOT ENTER 8 NO LITTERING 5 SPEED LIMIT 4 NO SMOKING 4

X X X X X **John Wayne 52**

CAR 43 HOUSE/VACATION H. 19 BIG SCREEN TV 12 SWIMMING POOL 9

QUES #1 NAME A MISTAKE THAT LITTLE CHILDREN MAKE WHEN GETTING DRESSED. **MC SIDE**

QUES #2 AFTER MOVING THE COUCH FOR THE FIRST TIME IN 10 YEARS, NAME SOMETHING YOU MIGHT FIND UNDERNEATH IT.

X	X	X	X	X	**Shoes On Wrong**	**42**
Clothes/Shoes						**4**
X	X	X	X	X	**Money/Change**	**49**
X	X	X	X	X	**Clothes Backwards**	**35**
X	X	X	X	X	**Dust Bunnies**	**24**
X	X	X	X	X	**Button Wrong**	**8**
X	X	X	X	X	**Old Food**	**7**
X	X	X	X	X	**Inside Out**	**5**
X	X	X	X	X	**Toys**	**5**
X	X	X	X	X	**Tie Shoes Wrong**	**4**
X	X	X	X	X	**The Remote**	**4**

▼ *FOLD LINE* ▼

GAME 56

X	X	X	X	X	**The Remote**	**4**
X	X	X	X	X	**Tie Shoes Wrong**	**4**
X	X	X	X	X	**Toys**	**5**
X	X	X	X	X	**Inside Out**	**5**
X	X	X	X	X	**Old Food**	**7**
X	X	X	X	X	**Button Wrong**	**8**
X	X	X	X	X	**Dust Bunnies**	**24**
X	X	X	X	X	**Clothes Backwards**	**35**
X	X	X	X	X	**Money/Change**	**49**
Clothes/Shoes						**4**
X	X	X	X	X	**Shoes On Wrong**	**42**

QUES #3 NAME SOMETHING FROM YOUR CHILDHOOD THAT YOU JUST WON'T THROW AWAY.

FAST MONEY QUESTIONS **MC SIDE**

FM 1 NAME SOMETHING YOU SQUEEZE TO GET MORE OUT OF IT.
FM 2 IF YOUR SHIRT ACCIDENTALLY CAUGHT ON FIRE, WHAT WOULD BE THE BEST THING TO DO?
FM 3 NAME AN ANIMAL THAT BEST DESCRIBES YOUR BOSS.
FM 4 NAME A BOOK THAT COULD KNOCK YOU OUT IF YOU WERE HIT OVER THE HEAD WITH IT.
FM 5 NAME A DEVICE THAT YOU SERIOUSLY THINK YOU COULD NOT LIVE WITHOUT.

Jewelry 4

TOOTHPASTE 39 | ORANGE 20 | LEMON 17

X X X X X

DROP & ROLL 69 | RIP IT OFF 17 | SPLASH WATER ON IT 8

X X X X X

SNAKE 18 | MONKEY/APE 14 | DOG 13

X X X X X

DICTIONARY 39 | ENCYCLOPEDIA 25 | BIBLE 14

X X X X X

TV/REMOTE 34 | TELEPHONE 28 | STOVE/OVEN 6

Teddy Bear/Toys 48

KETCHUP 14 | MUSTARD 3

Blanket 16

JUMP IN POOL 3 | JUMP IN SHOWER 2

Clothes/Shoes 9

BEAR 11 | DONKEY 9 | PUSSYCAT 6

Pictures 6

PHONE BOOK 14 | WAR & PEACE 6

Trophies 4

CAN OPENER 5 | RADIO 5 | COMPUTER 3

▼ *FOLD LINE* ▼

TV/REMOTE 34 | TELEPHONE 28 | STOVE/OVEN 6

Trophies 4

X X X X X

CAN OPENER 5 | RADIO 5 | COMPUTER 3

DICTIONARY 39 | ENCYCLOPEDIA 25 | BIBLE 14

Pictures 6

X X X X X

PHONE BOOK 14 | WAR & PEACE 6

SNAKE 18 | MONKEY/APE 14 | DOG 13

Clothes/Shoes 9

X X X X X

BEAR 11 | DONKEY 9 | PUSSYCAT 6

DROP & ROLL 69 | RIP IT OFF 17 | SPLASH WATER ON IT 8

Blanket 16

JUMP IN POOL 3 | JUMP IN SHOWER 2

TOOTHPASTE 39 | ORANGE 20 | LEMON 17

Teddy Bear/Toys 48

KETCHUP 14 | MUSTARD 3

Jewelry 4

QUES #1 NAME SOMETHING AN ALIEN MIGHT REPORT THAT EARTH HAS A LOT OF.

MC SIDE

QUES #2 NAME SOMETHING THAT SOME PEOPLE EAT RAW.

Crime	4
X X X X X	
Water	4
X X X X X	
X X X X X	
X X X X X	
X X X X X	
X X X X X	
X X X X X	
X X X X X	

People	62
Seafood	49
Pollution/Trash	8
Vegetables	48
Land/Dirt	6
Meat	2
Food	6
X X X X X	
Cars	4
X X X X X	

▼ *FOLD LINE* ▼

GAME 57

X X X X X
X X X X X
X X X X X
X X X X X
X X X X X
X X X X X
X X X X X
X X X X X
X X X X X

Cars	4

X X X X X

Food	6
Meat	2
Land/Dirt	6
Vegetables	48
Pollution/Trash	8
Seafood	49
People	62

Water	4

X X X X X

Crime	4

QUES #3 NAME SOMETHING PEOPLE TAKE WITH THEM TO THE BASEMENT WHEN A TORNADO IS COMING.

FAST MONEY QUESTIONS — MC SIDE

FM 1 NAME SOMETHING THAT MIGHT BE DANGEROUS TO CROSS.
FM 2 NAME SOMETHING YOU'VE STAYED UP ALL NIGHT WORRYING ABOUT.
FM 3 NAME SOMETHING IN YOUR HOUSE YOU HAVE NEVER CLEANED UNDER.
FM 4 NAME SOMETHING SOME PEOPLE BUY NEW AND OTHER PEOPLE BUY USED.
FM 5 NAME SOMETHING PEOPLE HAVE TO BE TAUGHT TO HOLD CORRECTLY.

X	X	X	X	X	**Food**	**33**
RAILROAD TRACK 37	STREET 26	HIGHWAY/FREEWAY 14			RIVER 8	A PERSON IN A BAD MOOD 5	BRIDGE 4
X	X	X	X	X	**Water**	**22**
KIDS/FAMILY 49	MONEY/BILLS 26	SCHOOL/TEST 9			HEALTH ISSUES 6	JOB/INTERVIEW 3
X	X	X	X	X	**Flashlight**	**21**
STOVE/OVEN 25	REFRIGERATOR 19	BEDROOM 16			COUCH 15	SINK 5	TELEVISION 5
X	X	X	X	X	**Radio**	**7**
CAR 74	CLOTHES 12	FURNITURE 5			APPLIANCES/TV 4
X	X	X	X	X	**Children**	**7**
SILVERWARE 31	BABY/BABY'S HEAD 30	PENCIL 14			SCISSORS 3	CHOPSTICKS 3

▼ *FOLD LINE* ▼

X	X	X	X	X	**Food**	**33**
RAILROAD TRACK 37	STREET 26	HIGHWAY/FREEWAY 14			RIVER 8	A PERSON IN A BAD MOOD 5	BRIDGE 4
X	X	X	X	X	**Water**	**22**
KIDS/FAMILY 49	MONEY/BILLS 26	SCHOOL/TEST 9			HEALTH ISSUES 6	JOB/INTERVIEW 3
X	X	X	X	X	**Flashlight**	**21**
STOVE/OVEN 25	REFRIGERATOR 19	BEDROOM 16			COUCH 15	SINK 5	TELEVISION 5
X	X	X	X	X	**Radio**	**7**
CAR 74	CLOTHES 12	FURNITURE 5			APPLIANCES/TV 4
X	X	X	X	X	**Children**	**7**
SILVERWARE 31	BABY/BABY'S HEAD 30	PENCIL 14			SCISSORS 3	CHOPSTICKS 3

QUES #1 NAME SOMETHING OF YOURS THAT'S FALLING APART.

MC SIDE

QUES #2 NAME A PRECIOUS STONE OR GEM.

X	X	X	X	X	**My Body**	**27**
X	X	X	X	X	**Diamond**	**75**
X	X	X	X	X	**Life/Relationship**	**24**
X	X	X	X	X	**Ruby**	**15**
X	X	X	X	X	**My Car**	**16**
X	X	X	X	X	**Emerald**	**5**
X	X	X	X	X	**My House**	**13**
X	X	X	X	X	**Opal**	**2**
X	X	X	X	X	**My Furniture**	**8**
X	X	X	X	X	**Pearl**	**2**

▼ *FOLD LINE* ▼

GAME 58

X	X	X	X	X	**Pearl**	**2**
X	X	X	X	X	**My Furniture**	**8**
X	X	X	X	X	**Opal**	**2**
X	X	X	X	X	**My House**	**13**
X	X	X	X	X	**Emerald**	**5**
X	X	X	X	X	**My Car**	**16**
X	X	X	X	X	**Ruby**	**15**
X	X	X	X	X	**Life/Relationship**	**24**
X	X	X	X	X	**Diamond**	**75**
X	X	X	X	X	**My Body**	**27**

QUES #3 NAME SOMETHING THAT COULD SPRING A LEAK.

FAST MONEY QUESTIONS

FM 1 NAME SOMETHING PEOPLE DO TO AVOID TRAFFIC.
FM 2 NAME SOMETHING BABIES THROW OUT OF THE CRIB.
FM 3 NAME SOMETHING TO HELP YOU THROUGH A LONELY NIGHT.
FM 4 NAME A COUNTRY WITH A HISTORY OF SEAFARING MEN.
FM 5 NAME SOMETHING THAT PEOPLE'S BODIES TELL THEM IT IS TIME TO DO.

MC SIDE

X	X	X	X	X	**Faucet**				**35**
TAKE ALT. ROUTE 46		PUBLIC TRANSIT 23		LEAVE EARLY 19	WALK 4		CARPOOL 3		STAY HOME 3
X	X	X	X	X	**Pipes**				**27**
RATTLE/TOYS 59		BOTTLE/FOOD 22		PACIFIER 15	BLANKET 2		PILLOW 2		
X	X	X	X	X	**Hose**				**11**
TV/MOVIE 34		BOOK 33		FOOD 9	MUSIC 5	PET 4	PILLOW 4		COMPANION 4
X	X	X	X	X	**Waterbed**				**9**
NORWAY 23		ENGLAND 22		SPAIN 12	PORTUGAL 11		GREECE 8		USA 7
X	X	X	X	X	**Boat**				**4**
GO TO SLEEP 34		GO TO BATHROOM 33		EAT/DRINK 13	TAKE A BATH 12		EXERCISE 3		

▼ *FOLD LINE* ▼

X	X	X	X	X	**Faucet**				**35**
TAKE ALT. ROUTE 46		PUBLIC TRANSIT 23		LEAVE EARLY 19	WALK 4		CARPOOL 3		STAY HOME 3
X	X	X	X	X	**Pipes**				**27**
RATTLE/TOYS 59		BOTTLE/FOOD 22		PACIFIER 15	BLANKET 2		PILLOW 2		
X	X	X	X	X	**Hose**				**11**
TV/MOVIE 34		BOOK 33		FOOD 9	MUSIC 5	PET 4	PILLOW 4		COMPANION 4
X	X	X	X	X	**Waterbed**				**9**
NORWAY 23		ENGLAND 22		SPAIN 12	PORTUGAL 11		GREECE 8		USA 7
X	X	X	X	X	**Boat**				**4**
GO TO SLEEP 34		GO TO BATHROOM 33		EAT/DRINK 13	TAKE A BATH 12		EXERCISE 3		

QUES #1 NAME SOMETHING YOU MIGHT FIND ON AN OLD PIRATE SHIP. **MC SIDE**

QUES #2 NAME A REASON IN THE MIDDLE OF THE NIGHT YOU MIGHT MAKE YOUR SPOUSE GET OUT OF BED.

X	X	X	X	X	**Treasure/Gold**	**64**
X	X	X	X	X	**Check Noise**	**34**
X	X	X	X	X	**Flag/Jolly Roger**	**7**
X	X	X	X	X	**Snoring**	**15**
X	X	X	X	X	**Cannon**	**6**
X	X	X	X	X	**Attend To Baby**	**11**
X	X	X	X	X	**Sails**	**6**
X	X	X	X	X	**Feel Sick**	**8**
X	X	X	X	X	**Sword**	**4**
X	X	X	X	X	**Get Glass of Water**	**6**

▼ *FOLD LINE* ▼

X	X	X	X	X	**Get Glass of Water**	**6**
X	X	X	X	X	**Sword**	**4**
X	X	X	X	X	**Feel Sick**	**8**
X	X	X	X	X	**Sails**	**6**
X	X	X	X	X	**Attend to Baby**	**11**
X	X	X	X	X	**Cannon**	**6**
X	X	X	X	X	**Snoring**	**15**
X	X	X	X	X	**Flag/Jolly Roger**	**7**
X	X	X	X	X	**Check Noise**	**34**
X	X	X	X	X	**Treasure/Gold**	**64**

QUES #3 NAME SOMETHING YOU MIGHT TAKE FROM A RESTAURANT.

FAST MONEY QUESTIONS MC SIDE

FM 1 NAME SOMETHING A DOG MIGHT HAVE IN ITS MOUTH.
FM 2 NAME A WAY TO WAKE SOMEONE UP IN THE MORNING THAT WOULD BE REALLY MEAN.
FM 3 NAME AN ANIMAL YOU COULD LEAVE BY ITSELF FOR A COUPLE OF DAYS.
FM 4 NAME SOMETHING PEOPLE POSTPONE DOING FOR AS LONG AS POSSIBLE.
FM 5 REAL OR FICTIONAL, NAME SOMEONE WHO MARRIED A PRINCE.

Napkin 7

BONE 62 | BALL/TOY 20 | TEETH 11

X X X X X

THROW WATER 57 | SCREAM/YELL 13 | BLAST RADIO 6

X X X X X

CAT 44 | FISH 34 | BIRD 10

X X X X X

BILLS/TAXES 36 | CLEANING/LAUNDRY 27 | GOING TO DENTIST 8

X X X X X

PRINCESS DIANA 39 | CINDERELLA 29 | GRACE KELLY 22

Silverware 19

TONGUE 3 | THE MAILMAN 2

Leftovers 18

CALL ON PHONE 5 | TICKLE/TAP 4

Salt/Pepper shaker 16

DOG 7 | SNAKE 2

Glass/Cup 12

GETTING MARRIED 8 | GOING TO DOCTOR 5

Sweetener/Sugar 7

SNOW WHITE 5 | SLEEPING BEAUTY 3

▼ *FOLD LINE* ▼

Silverware 19

BONE 62 | BALL/TOY 20 | TEETH 11

Napkin 7

TONGUE 3 | THE MAILMAN 2

X X X X X

Leftovers 18

THROW WATER 57 | SCREAM/YELL 13 | BLAST RADIO 6

X X X X X

Salt/Pepper shaker 16

CALL ON PHONE 5 | TICKLE/TAP 4

X X X X X

Glass/Cup 12

CAT 44 | FISH 34 | BIRD 10

X X X X X

Sweetener/Sugar 7

DOG 7 | SNAKE 2

X X X X X

BILLS/TAXES 36 | CLEANING/LAUNDRY 27 | GOING TO DENTIST 8

GETTING MARRIED 8 | GOING TO DOCTOR 5

PRINCESS DIANA 39 | CINDERELLA 29 | GRACE KELLY 22

SNOW WHITE 5 | SLEEPING BEAUTY 3

QUES #1 NAME SOMETHING THAT HEATS UP WHEN YOU TURN IT ON.

MC SIDE

QUES #2 NAME SOMETHING A QUARTERBACK HOPES DOESN'T HAPPEN DURING A GAME.

X	X	X	X	X	**Stove/Oven**	**50**
X	X	X	X	X	**Sacked/Tackled**	**41**
X	X	X	X	X	**Heater**	**7**
X	X	X	X	X	**Fumble/Drop Ball**	**25**
X	X	X	X	X	**Teakettle**	**7**
X	X	X	X	X	**Injured/Get Sick**	**17**
X	X	X	X	X	**Iron**	**7**
X	X	X	X	X	**Interception**	**14**
X	X	X	X	X	**Coffeepot**	**5**
X	X	X	X	X	X X X X X	

▼ *FOLD LINE* ▼

GAME 60

X	X	X	X	X	X X X X X	
X	X	X	X	X	**Coffeepot**	**5**
X	X	X	X	X	**Interception**	**14**
X	X	X	X	X	**Iron**	**7**
X	X	X	X	X	**Injured/Get Sick**	**17**
X	X	X	X	X	**Teakettle**	**7**
X	X	X	X	X	**Fumble/Drop Ball**	**25**
X	X	X	X	X	**Heater**	**7**
X	X	X	X	X	**Sacked/Tackled**	**41**
X	X	X	X	X	**Stove/Oven**	**50**

QUES #3 NAME SOMETHING THAT DOGS DO THAT CATS PROBABLY THINK IS REALLY STUPID.

FAST MONEY QUESTIONS **MC SIDE**

FM 1 NAME A FOOD THAT IS SLOPPY TO EAT.
FM 2 NAME SOMETHING TO DO TO PASS THE TIME WHILE COOKING.
FM 3 NAME SOMETHING YOU LET "PILE UP" WHEN YOU'RE FEELING LAZY.
FM 4 WHAT BREED OF DOG MIGHT BE CALLED "PRECIOUS?"
FM 5 GIVE ME ANOTHER NAME FOR "HOUSE".

Sniff Stuff 5

SLOPPY JOES 43 SPAGHETTI 22 RIBS 6

X X X X X

WATCH TV/VIDEO 42 READ 13 RADIO/MUSIC 11

X X X X X

THE LAUNDRY 60 THE DISHES 12 THE HOUSEWORK 10

X X X X X

POODLE 71 CHIHUAHUA 10 COCKER SPANIEL 6

X X X X X

HOME 55 CRIB 19 DWELLING 4

Bark 38

SOUP/CHILI 6 PIZZA 5

Chase Tail 17

TALK ON PHONE 9 SING 9

Chase Cats 10

NEWSPAPERS/PAPERS 4 THE BILLS 4

Chase Cars 5

PEKINGESE 4 SHIH-TZU 3

Lick Stuff 5

ABODE 4 PAD 3 RESIDENCE 3

▼ *FOLD LINE* ▼

Bark 38

SLOPPY JOES 43 SPAGHETTI 22 RIBS 6

SOUP/CHILI 6 PIZZA 5

Sniff Stuff 5

WATCH TV/VIDEO 42 READ 13 RADIO/MUSIC 11

TALK ON PHONE 9 SING 9

Chase Tail 17

THE LAUNDRY 60 THE DISHES 12 THE HOUSEWORK 10

NEWSPAPERS/PAPERS 4 THE BILLS 4

Chase Cats 10

POODLE 71 CHIHUAHUA 10 COCKER SPANIEL 6

PEKINGESE 4 SHIH-TZU 3

Chase Cars 5

HOME 55 CRIB 19 DWELLING 4

ABODE 4 PAD 3 RESIDENCE 3

Lick Stuff 5

QUES #1 IF YOU SAW SOMEONE GETTING MUGGED, WHAT WOULD YOU DO?

MC SIDE

QUES #2 NAME SOMETHING THAT WOULD EMBARRASS AN ACTOR ON STAGE.

X	X	X	X	X	**Call 911/Police**	**31**
X	X	X	X	X	**Ye Forgeteth Line**	**48**
X	X	X	X	X	**Try To Help**	**31**
X	X	X	X	X	**Tripeth/Falleth**	**21**
X	X	X	X	X	**Yell**	**7**
X	X	X	X	X	**Ye Pants Falleth**	**10**
X	X	X	X	X	**Go Get Help**	**5**
X	X	X	X	X	**Ye Fly Unzippeth**	**6**
X	X	X	X	X	**Nothing/Walk Away**	**4**
X	X	X	X	X	**Ye Breaketh Wind**	**5**

▼ *FOLD LINE* ▼

GAME 61

X	X	X	X	X	**Call 911/Police**	**31**
X	X	X	X	X	**Ye Forgeteth Line**	**48**
X	X	X	X	X	**Try To Help**	**31**
X	X	X	X	X	**Tripeth/Falleth**	**21**
X	X	X	X	X	**Yell**	**7**
X	X	X	X	X	**Ye Pants Falleth**	**10**
X	X	X	X	X	**Go Get Help**	**5**
X	X	X	X	X	**Ye Fly Unzippeth**	**6**
X	X	X	X	X	**Nothing/Walk Away**	**4**
X	X	X	X	X	**Ye Breaketh Wind**	**5**

QUES #3 NAME SOMETHING THAT COULD RUIN A SHOPPING TRIP TO THE MALL.

FAST MONEY QUESTIONS **MC SIDE**

FM 1 NAME SOMETHING HIPPIES USED TO WEAR THAT MAY SOMEDAY COME BACK IN STYLE.
FM 2 NAME SOMEONE FAMOUS WITH THE FIRST NAME OF "MICHAEL."
FM 3 IN A LARGE FAMILY, NAME SOMETHING KIDS HAVE TO WAIT LONGER FOR.
FM 4 NAME SOMETHING THAT IS KEPT IN A "TANK."
FM 5 GIVE ME A NAME THAT RHYMES WITH "HARRY."

X X X X X **No/Lose Money** **59**

BELL-BOTTOMS 45 TIE-DYE 16 BEADS 10 HEADBANDS 6 LONG HAIR 6 GRANNY GLASSES 3

X X X X X **Car Problems** **9**

MICHAEL JACKSON 42 MICHAEL JORDAN 31 MICHAEL DOUGLAS 15 MICHAEL LANDON 6 MICHAEL J. FOX 4

X X X X X **Kids** **7**

BATHROOM 52 NEW CLOTHES 17 FOOD 12 GIFTS/BIKE 7 ATTENTION 4

X X X X X **Rain/Weather** **6**

FISH 68 GAS 17 WATER 6 OIL 4 PROPANE 3

X X X X X **No Parking** **5**

LARRY 35 BARRY 31 MARY 19 KERRY 5 PERRY 4 TERRY 4

▼ *FOLD LINE* ▼

TERRY 4 PERRY 4 KERRY 5 MARY 19 BARRY 31 LARRY 35

X X X X X **No Parking** **5**

PROPANE 3 OIL 4 WATER 6 GAS 17 FISH 68

X X X X X **Rain/Weather** **6**

ATTENTION 4 GIFTS/BIKE 7 FOOD 12 NEW CLOTHES 17 BATHROOM 52

X X X X X **Kids** **7**

MICHAEL J. FOX 4 MICHAEL LANDON 6 MICHAEL DOUGLAS 15 MICHAEL JORDAN 31 MICHAEL JACKSON 42

X X X X X **Car Problems** **9**

GRANNY GLASSES 3 LONG HAIR 6 HEADBANDS 6 BEADS 10 TIE-DYE 16 BELL-BOTTOMS 45

X X X X X **No/Lose Money** **59**

QUES #1 NAME SOMEONE WHOSE JOB IS TO CARE FOR PEOPLE. **MC SIDE**

QUES #2 IF YOU HAD THE MONEY, NAME SOMETHING YOU'D TAKE LESSONS TO LEARN HOW TO DO.

X	X	X	X	X	**Nurse**	**54**
X	X	X	X	X	**Music/Singing**	**47**
X	X	X	X	X	**Doctor**	**23**
X	X	X	X	X	**Dance Lessons**	**13**
X	X	X	X	X	**Mother**	**10**
X	X	X	X	X	**Flying Lessons**	**10**
X	X	X	X	X	**Caregiver**	**6**
X	X	X	X	X	**Skydiving Lessons**	**4**
X	X	X	X	X	X X X X X	
X	X	X	X	X	**Driving/Racing**	**4**

▼ *FOLD LINE* ▼

GAME 62

X	X	X	X	X	**Driving/Racing**	**4**
X	X	X	X	X	X X X X X	
X	X	X	X	X	**Skydiving Lessons**	**4**
X	X	X	X	X	**Caregiver**	**6**
X	X	X	X	X	**Flying Lessons**	**10**
X	X	X	X	X	**Mother**	**10**
X	X	X	X	X	**Dance Lessons**	**13**
X	X	X	X	X	**Doctor**	**23**
X	X	X	X	X	**Music/Singing**	**47**
X	X	X	X	X	**Nurse**	**54**

QUES #3 PAST OR PRESENT, WHAT BOXER WOULD YOU MOST HATE TO STEP INTO THE RING WITH?

FAST MONEY QUESTIONS **MC SIDE**

FM 1 NAME SOMETHING YOU MIGHT HAVE TO GET DOWN FROM YOUR ROOF.
FM 2 NAME SOMETHING A CHILD MIGHT DO RIGHT BEFORE BED.
FM 3 NAME SOMETHING MANY MARRIED MEN AND WOMEN RUN OUT OF.
FM 4 NAME SOMETHING A HOSPITAL PATIENT LIKES TO HAVE NEARBY.
FM 5 NAME AN ITEM PEOPLE BRING TO A PAWN SHOP.

X X X X X **Mike Tyson** **58**

A BALL/TOYS 28 LEAVES 20 CAT/ANIMAL 19 ANTENNA/DISH 9 SNOW 7 TILES/ROOFING 6 LADDER 5

X X X X X **Muhammad Ali** **28**

PRAY 43 GO TO BATHROOM 21 BRUSH TEETH 16 DRINK WATER 7 EAT 3

X X X X X **Joe Frazier** **5**

MONEY 42 PATIENCE 14 LOVE/AFFECTION 14 FOOD 8 TIME 5

X X X X X **Joe Louis** **3**

TELEPHONE 34 CALL BUTTON 16 FAMILY/COMPANY 11 REMOTE/TV 9 WATER/ICE 9

X X X X X **Rocky Marciano** **2**

JEWELRY/WATCH 85 MUSICAL INSTRUMENT 4 CAMERA 2 DVD 2 RADIO 2 TV 2 CHINA/DISHES 2

▼ *FOLD LINE* ▼

JEWELRY/WATCH 85 MUSICAL INSTRUMENT 4 CAMERA 2 DVD 2 RADIO 2 TV 2 CHINA/DISHES 2

X X X X X **Rocky Marciano** **2**

TELEPHONE 34 CALL BUTTON 16 FAMILY/COMPANY 11 REMOTE/TV 9 WATER/ICE 9

X X X X X **Joe Louis** **3**

MONEY 42 PATIENCE 14 LOVE/AFFECTION 14 FOOD 8 TIME 5

X X X X X **Joe Frazier** **5**

PRAY 43 GO TO BATHROOM 21 BRUSH TEETH 16 DRINK WATER 7 EAT 3

X X X X X **Muhammad Ali** **28**

A BALL/TOYS 28 LEAVES 20 CAT/ANIMAL 19 ANTENNA/DISH 9 SNOW 7 TILES/ROOFING 6 LADDER 5

X X X X X **Mike Tyson** **58**

QUES #1 TELL ME AN OCCUPATION IN WHICH YOU DEAL WITH PEOPLE'S FEET.

MC SIDE

QUES #2 NAME A BAD OCCUPATION FOR SOMEONE WHO IS HABITUALLY LATE.

X	X	X	X	X	**Podiatrist**	**63**
Police Officer				**5**	**Doctor**	**32**
X	X	X	X	X	**Manicurist**	**11**
X	X	X	X	X	**Bus Driver**	**8**
X	X	X	X	X	**Shoe Salesman**	**10**
X	X	X	X	X	**Teacher**	**7**
X	X	X	X	X	**Masseuse**	**8**
X	X	X	X	X	**Mailman**	**6**
X	X	X	X	X	**Reflexologist**	**6**
X	X	X	X	X	**Nurse**	**5**

▼ *FOLD LINE* ▼

GAME 63

X	X	X	X	X	**Nurse**	**5**
X	X	X	X	X	**Reflexologist**	**6**
X	X	X	X	X	**Mailman**	**6**
X	X	X	X	X	**Masseuse**	**8**
X	X	X	X	X	**Teacher**	**7**
X	X	X	X	X	**Shoe Salesman**	**10**
X	X	X	X	X	**Bus Driver**	**8**
X	X	X	X	X	**Manicurist**	**11**
Police Officer				**5**	**Doctor**	**32**
X	X	X	X	X	**Podiatrist**	**63**

QUES #3 NAME A GOOD WAY TO TEACH CHILDREN THE VALUE OF MONEY.

FAST MONEY QUESTIONS MC SIDE

FM 1 GIVE ME A WORD THAT RHYMES WITH 'CHEAT."
FM 2 NAME A KIND OF ITEM THAT PEOPLE FREQUENTLY BUY ON IMPULSE.
FM 3 NAME A JOB SO DANGEROUS, YOU WOULDN'T WANT IT.
FM 4 NAME SOMETHING SPECIFIC YOU ALWAYS RUN OUT OF WHEN YOU'RE SICK.
FM 5 NAME A PLACE WHERE YOU WISH PEOPLE WOULDN'T TAKE THEIR DOGS.

Don't Give Money 6

BEAT/BEET 26 MEAT/MEET 17 SEAT 16

Take Them Shopping 3

FOOD/SWEETS 50 CLOTHES/SHOES 29 JEWELRY 9

X X X X X

POLICE OFFICER 26 CONSTRUCTION 16 FIREFIGHTER 14

X X X X X

MEDICINE 55 TISSUE 30 SOUP 6

X X X X X

PARK 56 RESTAURANT 14 PLAYGROUND 8

Money/Allowance 33

FEET 10 NEAT 8

Saving/Piggy Bank 15

CAR 2 PERFUME 2 MUSIC/CS'S 2

Earn It/Chores 13

WINDOW WASHER 6 AIRPLANE PILOT 6

Open Bank Account 12

JUICE 5

Pay For Own Stuff 11

STORES/MARKET 7 SIDEWALK 4

▼ *FOLD LINE* ▼

PARK 56 RESTAURANT 14 PLAYGROUND 8 STORES/MARKET 7 SIDEWALK 4

Pay For Own Stuff 11

X X X X X

MEDICINE 55 TISSUE 30 SOUP 6 JUICE 5

Open Bank Account 12

X X X X X

POLICE OFFICER 26 CONSTRUCTION 16 FIREFIGHTER 14 WINDOW WASHER 6 AIRPLANE PILOT 6

Earn It/Chores 13

X X X X X

FOOD/SWEETS 50 CLOTHES/SHOES 29 JEWELRY 9 CAR 2 PERFUME 2 MUSIC/CS'S 2

Saving/Piggy Bank 15

BEAT/BEET 26 MEAT/MEET 17 SEAT 16 FEET 10 NEAT 8

Money/Allowance 33

Take Them Shopping 3

Don't Give Money 6

QUES #1 TELL ME A PUBLIC PLACE THAT'S PERFECT FOR "PEOPLE WATCHING." MC SIDE

QUES #2 NAME SOMETHING PEOPLE DO TO PREVENT FROM GETTING SICK.

Restaurant					**3**	**Park** **40**
Dress Warmly					**6**	**Vitamins** **45**
Train/Subway					**3**	**Mall/Store** **23**
Wash Hands					**4**	**Eat/Drink Right** **14**
X	X	X	X	X		**Beach/Boardwalk** **8**
Get Flu Shot					**4**	**Exercise** **9**
X	X	X	X	X		**Bar** **3**
X	X	X	X	X		**Take Medicine** **9**
X	X	X	X	X		**Museum** **3**
X	X	X	X	X		**Visit Doctor** **9**

▼ *FOLD LINE* ▼

GAME 64

Park					**40**	**Restaurant** **3**
Vitamins					**45**	**Dress Warmly** **6**
Mall/store					**23**	**Train/Subway** **3**
Eat/Drink Right					**14**	**Wash Hands** **4**
Beach/Boardwalk					**8**	X X X X X
Exercise					**9**	**Get Flu Shot** **4**
Bar					**3**	X X X X X
Take Medicine					**9**	X X X X X
Museum					**3**	X X X X X
Visit Doctor					**9**	X X X X X

QUES #3 NAME A GOOD OUTDOOR SPORT FOR A HUSBAND AND WIFE TO DO TOGETHER.

FAST MONEY QUESTIONS — **MC SIDE**

FM 1 NAME SOMETHING A MAN MIGHT HAVE A COLLECTION OF.
FM 2 NAME A COMPLAINT PEOPLE HAVE ABOUT CITY STREETS.
FM 3 NAME A TIME ZONE IN THE UNITED STATES.
FM 4 NAME AN ANIMAL THAT YOU COULD OUTRUN.
FM 5 NAME SOMETHING THAT SOME PEOPLE REFRIGERATE AND SOME PEOPLE DON'T.

X	X	X	X	X	**Playing Tennis**		**23**
BASEBALL CARDS 26		STAMPS 10		COINS 8	GUNS 7	CARS 7	MAGAZINES 7
X	X	X	X	X	**Golf/Mini Golf**		**18**
POTHOLES/ROUGH 43	DIRTY/LITTER 37		TRAFFIC/CONGESTED 10		LIMITED PARKING 3	NOT WIDE ENOUGH 3	NOT WELL LIT 2
X	X	X	X	X	**Walking/Hiking**		**13**
EASTERN 70		CENTRAL 15		PACIFIC 10	MOUNTAIN 5		
X	X	X	X	X	**Riding Bikes**		**11**
TURTLE 43		CAT 14		SNAIL 12	DOG 9	PIG 4	RABBIT 3
X	X	X	X	X	**Swimming**		**6**
KETCHUP 25		BREAD 16		FRUIT 12	PEANUT BUTTER 9		

▼ *FOLD LINE* ▼

X	X	X	X	X	**Playing Tennis**		**23**
BASEBALL CARDS 26		STAMPS 10		COINS 8	GUNS 7	CARS 7	MAGAZINES 7
X	X	X	X	X	**Golf/Mini Golf**		**18**
POTHOLES/ROUGH 43	DIRTY/LITTER 37		TRAFFIC/CONGESTED 10		LIMITED PARKING 3	NOT WIDE ENOUGH 3	NOT WELL LIT 2
X	X	X	X	X	**Walking/Hiking**		**13**
EASTERN 70		CENTRAL 15		PACIFIC 10	MOUNTAIN 5		
X	X	X	X	X	**Riding Bikes**		**11**
TURTLE 43		CAT 14		SNAIL 12	DOG 9	PIG 4	RABBIT 3
X	X	X	X	X	**Swimming**		**6**
KETCHUP 25		BREAD 16		FRUIT 12	PEANUT BUTTER 9		

QUES #1 NAME A PLACE WHERE YOU HATE TO BE SEATED NEAR A SCREAMING BABY. MC SIDE

QUES #2 NAME ONE POSSESSION THAT GIVES YOU THE MOST HOURS OF ENJOYMENT.

Doctor's Office					**4**	**Movie/Theater** **27**
PlayStation					**5**	**TV** **42**
Concert					**3**	**Restaurant** **23**
X	X	X	X	X		**Book** **11**
X	X	X	X	X		**Airplane** **17**
X	X	X	X	X		**Kids** **11**
X	X	X	X	X		**Church** **11**
X	X	X	X	X		**Computer** **8**
X	X	X	X	X		**Bus** **9**
X	X	X	X	X		**Drum Set** **5**

▼ *FOLD LINE* ▼

X	X	X	X	X	**5**	**Drum Set**
X	X	X	X	X	**9**	**Bus**
X	X	X	X	X	**8**	**Computer**
X	X	X	X	X	**11**	**Church**
X	X	X	X	X	**11**	**Kids**
X	X	X	X	X	**17**	**Airplane**
X	X	X	X	X	**11**	**Book**
X	X	X	X	X	**23**	**Restaurant**
					42	**TV**
					27	**Movie/Theater**
					3	**Concert**
					5	**PlayStation**
					4	**Doctor's Office**

QUES #3 NAME A PLACE WHERE PEOPLE PRETEND TO BE PAYING ATTENTION.

FAST MONEY QUESTIONS — MC SIDE

FM 1 NAME SOMETHING FOR WHICH YOU'VE GOTTEN A TRAFFIC TICKET.
FM 2 NAME AN OCCUPATION WHOSE MEMBERS DREAD RAINY DAYS.
FM 3 NAME SOMETHING YOU'VE SEEN PEOPLE CHASE.
FM 4 WHEN YOU HEAR THE WORDS "MUSIC LEGEND", WHAT PERFORMER COMES TO MIND?
FM 5 WHAT FOOD ARE YOU MOST LIKELY TO PIG OUT ON?

Sports Event 2

SPEEDING 50 | ILLEGAL PARKING 18 | RUNNING RED LIGHT 15

X X X X X

CONSTRUCTION 43 | MAIL CARRIER 16 | LANDSCAPE/GARDENER 6

X X X X X

DOG 31 | BUS 20 | PERSON/CHILD 14

X X X X X

ELVIS PRESLEY 22 | FRANK SINATRA 16 | RAY CHARLES 12

X X X X X

MEAT/CHICKEN 22 | ICE CREAM 17 | FISH/SEAFOOD 14

School 51

RUNNING STOP SIGN 7 | ILLEGAL TURN 4

Church 29

BASEBALL PLAYER 5 | SANITATION WORKER 5

Meeting/Work 7

CAT 9 | CAR/TAXI 9

Movies/Theater 4

JIMI HENDRIX 4 | BARBARA STREISAND 4

Concert/Play 3

PIZZA 12 | CANDY/CHOCOLATE 10 | CHIPS 9

▼ *FOLD LINE* ▼

School 51

SPEEDING 50 | ILLEGAL PARKING 18 | RUNNING RED LIGHT 15

Sports Event 2

RUNNING STOP SIGN 7 | ILLEGAL TURN 4

Church 29

CONSTRUCTION 43 | MAIL CARRIER 16 | LANDSCAPE/GARDENER 6

Meeting/Work 7

DOG 31 | BUS 20 | PERSON/CHILD 14

CAT 9 | CAR/TAXI 9

Movies/Theater 4

ELVIS PRESLEY 22 | FRANK SINATRA 16 | RAY CHARLES 12

JIMI HENDRIX 4 | BARBARA STREISAND 4

Concert/Play 3

MEAT/CHICKEN 22 | ICE CREAM 17 | FISH/SEAFOOD 14

PIZZA 12 | CANDY/CHOCOLATE 10 | CHIPS 9

QUES #1 NAME SOMETHING YOU USUALLY DO EVERY NIGHT AFTER DINNER.

MC SIDE

QUES #2 NAME AN ACTIVITY YOU SHOULDN'T TAKE UP, UNLESS YOU KNOW HOW TO SWIM.

X X X X X	**Watch Television 32**
Water Polo 8	**Lifeguard 30**
X X X X X	**Wash Dishes 19**
Surfing 6	**Boating 14**
X X X X X	**Relax/Sleep 13**
Fishing 4	**Swimming 14**
X X X X X	**Brush Teeth 12**
X X X X X	**Scuba Diving 10**
X X X X X	X X X X X
X X X X X	**Water Skiing 9**

▼ *FOLD LINE* ▼

GAME 66

X X X X X	**Water Skiing 9**
X X X X X	X X X X X
X X X X X	**Scuba Diving 10**
X X X X X	**Brush Teeth 12**
Fishing 4	**Swimming 14**
X X X X X	**Relax/Sleep 13**
Surfing 6	**Boating 14**
X X X X X	**Wash Dishes 19**
Water Polo 8	**Lifeguard 30**
X X X X X	**Watch Television 32**

QUES #3 NAME SOMETHING YOU OFTEN HEAR, WHEN IT'S VERY QUIET IN CHURCH.

FAST MONEY QUESTIONS — **MC SIDE**

FM 1 NAME A PROFESSIONAL SPORTS TEAM IN NEW YORK.
FM 2 NAME SOMETHING THAT STARTS WITH THE WORD "SNOW."
FM 3 WHEN PEOPLE SAY THEY HAVE EXCITING NEWS, WHAT MAY THEY BE TALKING ABOUT?
FM 4 NAME A WAY A BABY CAN COMMUNICATE WITHOUT WORDS.
FM 5 NAME SOMETHING YOU HAVE MORE OF NOW THAN YOU DID 10 YEARS AGO.

Cell Phone/Pager 5

YANKEES 38 | GIANTS 27 | JETS 15 | KNICKS 14

X X X X X

Baby/Children 20

SNOWBALL 24 | SNOWFLAKE 17 | SNOWMAN 12 | SNOWMOBILE 12 | SNOW WHITE 11

X X X X X

Sneezing 14

NEWBORN BABY 30 | EXTRA MONEY 23 | GOT PREGNANT 14 | GOT MARRIED 10 | NEW JOB/PROMOTION 8 | NEW CAR 2

X X X X X

Talking/Praying 14

CRY 54 | POINT/GESTURES 20 | EYES 8 | SMILE 4 | FACIAL EXPRESSIONS 3 | STRETCH/YAWN 2 | THROW THINGS 2

X X X X X

Snoring 7

MONEY 29 | CLOTHES/SHOES 13 | WEIGHT 12 | SENSE/WISDOM 9 | KIDS/FAMILY 6

▼ *FOLD LINE* ▼

Coughing 20

YANKEES 38 | GIANTS 27 | JETS 15 | KNICKS 14

Baby/Children 20

SNOWBALL 24 | SNOWFLAKE 17 | SNOWMAN 12 | SNOWMOBILE 12 | SNOW WHITE 11

Sneezing 14

NEWBORN BABY 30 | EXTRA MONEY 23 | GOT PREGNANT 14 | GOT MARRIED 10 | NEW JOB/PROMOTION 8 | NEW CAR 2

Talking/Praying 14

CRY 54 | POINT/GESTURES 20 | EYES 8 | SMILE 4 | FACIAL EXPRESSIONS 3 | STRETCH/YAWN 2 | THROW THINGS 2

Snoring 7

MONEY 29 | CLOTHES/SHOES 13 | WEIGHT 12 | SENSE/WISDOM 9 | KIDS/FAMILY 6

QUES #1 NAME AN ACTIVITY DURING WHICH YOU GET BORED AND SLEEPY. **MC SIDE**

QUES #2 NAME A PLACE WHERE YOU SEE PEOPLE CONSTANTLY CHECKING THE TIME.

In Church				**4**		**Watching TV/Movie**	**35**
School				**4**		**Work**	**26**
At Lecture/Speech				**4**		**Reading**	**24**
Church				**4**		**Train Station**	**19**
X	X	X	X	X		**Sporting Event**	**7**
Mall				**3**		**Airport**	**14**
X	X	X	X	X		**Board Game**	**6**
X	X	X	X	X		**Doctor/Hospital**	**9**
X	X	X	X	X		**Studying/School**	**5**
X	X	X	X	X		**Bus stop/Station**	**9**

▼ *FOLD LINE* ▼

GAME 67

Watching TV/Movie	**35**		**In Church**				**4**
Work	**26**		**School**				**4**
Reading	**24**		**At Lecture/Speech**				**4**
Train Station	**19**		**Church**				**4**
Sporting Event	**7**		X	X	X	X	X
Airport	**14**		**Mall**				**3**
Board Game	**6**		X	X	X	X	X
Doctor/Hospital	**9**		X	X	X	X	X
Studying/School	**5**		X	X	X	X	X
Bus stop/Station	**9**		X	X	X	X	X

QUES #3 NAME SOMETHING A WOMAN SEES, THAT WOULD MAKE HER TELL HER HUSBAND TO STOP THE CAR.

FAST MONEY QUESTIONS **MC SIDE**

FM 1 GIVE ME A WORD THAT RHYMES WITH "BUBBLE."
FM 2 NAME SOMETHING THAT WOMEN LIKE TO HOLD.
FM 3 TELL ME A PHRASE THAT STARTS WITH THE WORDS, "GET TO..."
FM 4 NAME AN ACTIVITY THAT IS HARD TO DO WHEN YOU HAVE A STIFF NECK.
FM 5 NAME SOMETHING THAT STARTS WITH THE LETTER "C" THAT MEN DON'T LIKE TO DO.

Diamond Ring 2

TROUBLE 54 STUBBLE 16 DOUBLE 15

X X X X X

BABY/CHILD 50 MONEY/PURSE 25 SPOUSE/MATE 11

X X X X X

GET TO WORK 36 GET TO THE POINT 14 GET TO BED 13

X X X X X

DRIVING 27 EXERCISE 12 TURNING HEAD 12

X X X X X

CLEAN 45 COOK 31 CUDDLE 9

Sale/Store 44

RUBBLE 8

Animal 24

PET 5 DESIGNER PURSE 3

Person 12

GET TO IT 11 GET TO SCHOOL 8 ...CHURCH ON TIME 4

Accident 9

PLAYING SPORTS 11 WATCHING TV/MOVIE 5

Money 4

CHORES 5 CRY 4

▼ *FOLD LINE* ▼

Money 4

CLEAN 45 COOK 31 CUDDLE 9 CHORES 5 CRY 4

X X X X X

Accident 9

DRIVING 27 EXERCISE 12 TURNING HEAD 12 PLAYING SPORTS 11 WATCHING TV/MOVIE 5

X X X X X

Person 12

GET TO WORK 36 GET TO THE POINT 14 GET TO BED 13 GET TO IT 11 GET TO SCHOOL 8 ...CHURCH ON TIME 4

X X X X X

Animal 24

BABY/CHILD 50 MONEY/PURSE 25 SPOUSE/MATE 11 PET 5 DESIGNER PURSE 3

X X X X X

Sale/Store 44

TROUBLE 54 STUBBLE 16 DOUBLE 15 RUBBLE 8

Diamond Ring 2

QUES #1 NAME SOMETHING EVERY HOUSEHOLD SHOULD HAVE ON HAND, IN CASE OF EMERGENCY.

MC SIDE

QUES #2 NAME SOMETHING A SEVEN YEAR OLD TAKES WITH HIM WHEN HE RUNS AWAY FROM HOME.

Bottled Water					**3**	**Fire Extinguisher 49**
Pet					**4**	**Toy/Stuf'd Animal 57**
Money					**2**	**Phone/Cell Phone 14**
Family Pictures					**4**	**Food 9**
X	X	X	X	X		**Flashlight 13**
X	X	X	X	X		**Blanket 8**
X	X	X	X	X		**First-Aid Kit 11**
X	X	X	X	X		**Clothes/Suitcase 6**
X	X	X	X	X		**Smoke Detector 3**
X	X	X	X	X		**Backpack 4**

▼ *FOLD LINE* ▼

GAME 68

X	X	X	X	X	**4**	**Backpack**
X	X	X	X	X	**3**	**Smoke Detector**
X	X	X	X	X	**6**	**Clothes/Suitcase**
X	X	X	X	X	**11**	**First-Aid Kit**
X	X	X	X	X	**8**	**Blanket**
X	X	X	X	X	**13**	**Flashlight**
X	X	X	X	X	**9**	**Food**
Family Pictures					**4**	**Phone/Cell Phone 14**
Money					**2**	**Toy/Stuf'd Animal 57**
Pet					**4**	**Fire Extinguisher 49**
Bottled Water					**3**	

QUES #3 WITH NO TIME FOR FOOD SHOPPING, NAME SOMETHING A DESPERATE HOUSEWIFE SERVES FOR DINNER.

FAST MONEY QUESTIONS MC SIDE

FM 1 GIVE ME A NAME OF A STORE THAT'S IN ALMOST EVERY MALL IN AMERICA.
FM 2 ON WHICH HOLIDAYS ARE THE MOST COLLECT CALLS MADE?
FM 3 TELL ME SOMETHING YOU MIGHT BOIL BEFORE YOU EAT IT
FM 4 WHEN YOU STAY IN A HOTEL, NAME SOMETHING YOU WORRY ISN'T REALLY CLEAN.
FM 5 NAME SOMETHING YOU SHOULD ALWAYS TAKE IF IT'S OFFERED.

X X X X X **TV/Frozen Dinner 26**

STARBUCKS 17 GAP 15 WAL-MART 9 MACY'S 8 MCDONALD'S 5 JC PENNEY 5

X X X X X **Pizza 13**

CHRISTMAS 54 MOTHER'S DAY 24 FATHER'S DAY 12 THANKSGIVING 9

X X X X X **Eggs 6**

EGGS 59 POTATOES/VEGGIES 2 HOT DOGS 6 PASTA 4 CHICKEN 3

X X X X X **Macaroni & Cheese 6**

SHEETS 42 BATHROOM/TOILET 30 BEDSPREAD 19 CARPET 3 RESTAURANT 2 PILLOW 2

X X X X X **Hot Dogs 6**

MONEY 56 ADVICE 11 FOOD/DRINK 8 HAND 6 VACATION 4 COMPLIMENT 3

▼ *FOLD LINE* ▼

X X X X X **Hot Dogs 6**

MONEY 56 ADVICE 11 FOOD/DRINK 8 HAND 6 VACATION 4 COMPLIMENT 3

X X X X X **Macaroni & Cheese 6**

SHEETS 42 BATHROOM/TOILET 30 BEDSPREAD 19 CARPET 3 RESTAURANT 2 PILLOW 2

X X X X X **Eggs 6**

EGGS 59 POTATOES/VEGGIES 2 HOT DOGS 6 PASTA 4 CHICKEN 3

X X X X X **Pizza 13**

CHRISTMAS 54 MOTHER'S DAY 24 FATHER'S DAY 12 THANKSGIVING 9

X X X X X **Milky Way Bars 3**

STARBUCKS 17 GAP 15 WAL-MART 9 MACY'S 8 MCDONALD'S 5 JC PENNEY 5

TV/Frozen Dinner 26 **Mashed Potatoes 3**

QUES #1 NAME SOMETHING PEOPLE HAVE TROUBLE GETTING RID OF.

MC SIDE

QUES #2 NAME SOMETHING THAT NEVER WORKS WHEN YOU NEED IT THE MOST.

Trash				**5**	**Insects**				**23**
X	X	X	X	X	**Car**				**34**
In-Laws				**4**	**Illness/Disease**				**14**
X	X	X	X	X	**Flashlight**				**10**
Grown Kids				**4**	**Clothes/Shoes**				**9**
X	X	X	X	X	**Cell Phone/Phone**				**8**
X	X	X	X	X	**Weight/Fat**				**7**
X	X	X	X	X	**Pen**				**5**
X	X	X	X	X	**Mice/Rats**				**5**
X	X	X	X	X	X	X	X	X	X

▼ *FOLD LINE* ▼

GAME 69

X	X	X	X	X	X	X	X	X	X
X	X	X	X	X	**Mice/Rats**				**5**
X	X	X	X	X	**Pen**				**5**
X	X	X	X	X	**Weight/Fat**				**7**
X	X	X	X	X	**Cell Phone/Phone**				**8**
X	X	X	X	X	**Clothes/Shoes**				**9**
Grown Kids				**4**	**Flashlight**				**10**
X	X	X	X	X	**Illness/Disease**				**14**
In-Laws				**4**	**Car**				**34**
X	X	X	X	X	**Insects**				**23**
Trash				**5**					

QUES #3 NAME SOMETHING PEOPLE HATE TO FIND IN THEIR HOUSE.

FAST MONEY QUESTIONS MC SIDE

FM 1 NAME SOMETHING ADULTS TAKE LESSONS IN,
FM 2 GIVE ME A PHRASE THAT STARTS WITH THE WORD "CUT."
FM 3 NAME SOMETHING SPECIFIC THAT YOU WERE LATE TO BECAUSE YOU OVERSLEPT.
FM 4 NAME A FOOD PEOPLE STIR WHILE IT'S COOKING.
FM 5 GIVE ME A SPECIFIC REASON WHY YOU WOULDN'T WANT TO BE MARRIED TO YOU.

Trash 2

DANCING 36 | COMPUTERS 12 | MUSIC/INSTRUMENT 10

X X X X X

CUT IT OUT 28 | CUTTHROAT 10 | CUT TO THE CHASE 7

X X X X X

JOB/INTERVIEW 62 | DR./DENTIST APPT. 12 | PARTY/WEDDING 7

X X X X X

SOUP/STEW 39 | SAUCE 14 | PASTA 12

X X X X X

SLOB/MESSY 14 | NEAT FREAK 12 | MOODY/GRUMPY 10

Bugs/Roaches 59

PARENTING 9 | EXERCISE/SWIMMING 8

Mice 26

CUT YOUR HAIR 7 | CUT-RATE 6

Burglar 4

CHURCH 6 | SCHOOL/GRADUATION 5 | BUS 4

Dirt 3

RICE 10 | HOT CEREAL 6

Animal Droppings 2

STUBBORN 8 | OUTSPOKEN 8

▼ *FOLD LINE* ▼

SLOB/MESSY 14 | NEAT FREAK 12 | MOODY/GRUMPY 10 | STUBBORN 8 | OUTSPOKEN 8

X X X X X

Animal Droppings 2

SOUP/STEW 39 | SAUCE 14 | PASTA 12 | RICE 10 | HOT CEREAL 6

X X X X X

Dirt 3

JOB/INTERVIEW 62 | DR./DENTIST APPT. 12 | PARTY/WEDDING 7 | CHURCH 6 | SCHOOL/GRADUATION 5 | BUS 4

X X X X X

Burglar 4

CUT IT OUT 28 | CUTTHROAT 10 | CUT TO THE CHASE 7 | CUT YOUR HAIR 7 | CUT-RATE 6

X X X X X

Mice 26

DANCING 36 | COMPUTERS 12 | MUSIC/INSTRUMENT 10 | PARENTING 9 | EXERCISE/SWIMMING 8

Bugs/Roaches 59

Trash 2